KAPP

2017 PRODUCT CATALOGUE

Rainbow of the kitchen...

For the restaurant and food service industry, over 25 years Kapp has been one of the leader manufacturers of professional cookware and kitchen utensils.

Based in Izmir Turkey the company's facility is spread across 25.000 sq. Meters.

Manufacturing Equipment, Research and Development and Quality Testing Procedures are impressive infrastructure of Kapp.

Constant evaluation and expansion has always been the target for the company.

The unbeatable quality with Life Time Guarantee of Impact Bonded and Induction Ready pots and pans has made the brand, a reliable reference for all professionals involved in the restaurant and catering business.

Each year Kapp is expanding its range both in manufactured and complementary items.

Customer satisfaction is the major issue which is backed up with quality, fast response and performance.

Along with the distribution channels throughout Turkey Kapp is also distributed in 45 countries around the world from Europe to Middle and Far East, North and South Africa, United States and South America.

ISO 22000 TÜCSI JAS-ANZ Licence No: TI2797-FS

CE 1837

TÜV SÜD

TSE

TÜRKMALI

UNICERT HACCP

AS
HOL
AR
HOL
AP

1 Cooking

09 Pressure Cooker
09 Perssure Cooker Lid
09 Silicone Seal
14/17 Stock Pots(Bistro Line)
14/17 Casseroles(Bistro Line)
14/17 Shallow Stew Pan(Bistro Line)
14/17 Sauce Pan(Bistro Line)
14/17 Fry Pan(Bistro Line)
14/17 Lids (Bistro Line)
20 Stock Pots(Exclusive Line)
20 Casseroles(Exclusive Line)
21 Sauce Pan(Exclusive Line)
21 Lids (Exclusive LÍne)
22 Colander (Exclusive Line)
22 Pasta Colander Set
22 Couscous Set
23 Wide Shallow Pots
23 Wide Shallow Pan
25 Cast Iron Pots
27 Roast Easy
28 Roasting Pans
30 Roasting Pan Ipinium
32/33 Pans Stainless Steel
34 Pans Ceramic
34 Pans Aluminium Non Stick
35 Pans Carbon Steel (Heavy Duty)
36/37 Pans Carbon Steel
38/39 Pans Cast Iron

2 Preparing

42/43 GN Food Pans
44/45 GN Food Pans Perforated
46/47 GN Food Pans w/handle
48 Gn Food Pan Lid
49 Gn Appetizer Pan
57 Gn Melamine Pans
59 Pc Square Food Storage Cont.
60 Pp Storage Containers
61 Abc Containers
62 Salad Spinner
62 Slicers
62 Mandolines
66 Food Mill
66 Hamburger Press
67 Scissor
67/68 Utensils
70 Thermometer
70 Timer Digital
71 Grater
72 Scale
73 Calibrated Bowls
76 Colander
78 Strainers/Skimmer
79 Whisk
80/81 Spatulas
82 PE Cutting Board For Gn Pan
84/90 Knives
93 Knife Streilizer
93 Butcher Gloves Chainmail

3 Pastry

96/98 Mould Non-stick
99/104 Moulds Silicone
97 Baking Sheet Non-stick
97 Toastbrot Non-stick
104 Baking Sheet Silicone
105/106 Chocolate Moulds
107 Adjustable Mould
107 Cake Ring
107 Square Ring
109 Dough Wheel
109 Glove
112 Pastry Bag
113 Cream Whipper
113 Icing Tip Set
113 Torch
114 Roller
114 Rolling Pin
115 Bo
115 Flacone
115 Pouring Container
116 Cake Stand
116 Revolving Cake Stand
116 Tray Aluminium

4 Serving

122 Tray PC Unbreakable
123/124 Tray Display
124 Self Service
125 Ladles
125 Skimmers
126 Serving Spoons
126 Meat Forks
127 Serving Spatulas
128/132 Serving Set
129 Silicone Utensils
130 Tongs
131 Charcoal Tong
131 Grill Tong
131 Chef Tong
132 Ice Cream Spoon
132 Spoon Rest
132 Deco Spoon Set
133 Sauce Bottles
133 Pouring Container
133 Sauce Dispensers

5 Open Buffet

137 Chafing Dish Copper
139/144 Chafing Dish Lux
146/147 Chafing Dish Modern
149/154 Chafing Dish Premium
156/159 Chafing Dish Delux
159 Chafing Dish Bulit-in
160/161 Chafing Dish Classic
161 Sauce Tureen
161 Soup Tureen
162/164 Chafing Dish Equipments
165/166 Dispensers
168/169 Infrared Lamp
172/173 Display Stand
174/175 Open Buffet Units
176/179 Induction Cooker
180/182 Stand
182 Amuse Bouche Spoon
182 Amuse Bouche Spoon St.
183 Mini Melamine Displays
185 Tray Crystal Display
188/189 Elevator
190/191 Slate Display
192/193 Melamine Bowl
194/196 Melamine Display Plates
197/198 Bowl
201 Baguette Basket
201 Bread Basket Rattan

6 Table-Top

204/205 Slate Display Plates
206/207 Wooden Display Plates
208 Plates PC
209 Salt & Pepper Set
210 Condiment Set
210 Jar Set
211/212 Table-Top Items
213 Bowls
214 Bread Basket
215 Ashtray
215 Ashtray Stand

7 Beverage

218 Juice Cooler
219 Cooler&dispenser
219 Hot Chocolate Dispenser
220 Granita&ice Slush Dispenser
220 Ice Slush Dispenser
221 Orange Juicer
221 Pomegranate Dispenser
221 Tea Maker
222 Blender
223 Citrus Juicer
224/225 Dispenser
226 French Press
226 Glass Mug
226 Mini Tea Bag Holder
226 Acrylic Sugar Caddy
226 Mug
226 Tea/milk Pot
226 Water Jug
226 Jug PC
227 Glass Pc

8 Bar

230 Bottle Cooler
230 Ice Bucket
230 Mini Punch Bowl
232 Champagne Bucket
232 Wine Bucket
232 Bottle Stand
232 Champagne Bucket Stand
232 Wine Bucket Table Stand
233 Boston Shaker
233 Cocktail Shaker
233 Mixing Glass
233 Punch Bowl
234 Ice Crusher
234 Bar Spoon
234 Bar Strainer
234 Chalice Sweetener
234 Jigger
234 Napkin/pipette Holder
234 Pc Bar Container
234 Pourer
235 Appetizer Display
237 Ashtrays

9 Kitchen Appliances

240/243 Blender
244/248 Vegetable Cutter
249 Cheese Grater
250/255 Slicer
256/257 Planet Mixer
258/259 Bone Saw
260 Vacuum Packaging
262/263 Soft Cooker
264 Microwave Oven
265 Convection Oven
266 Meat Grinder
267 Conveyor Toaster
268/269 Induction Cooker
270 Pizza Warmer
272/274 Beverage Blender
274 Beverage Mixer
275 Citrus Juicer
276/277 Ice Crushing Machine

10 Carrying

280 Carrying Container
281 Carrying Tray
281 Portable Food Container
283 Thermobox 600
284 Beverage Thermobox
284 Isothermic Tray
284 Thermobox
285 Serving Trolley
285 Waste Bin
286 Cutlery Bin
286 Cutlery Bin 4 Compartment
286 Demontable Service Trolley
286 Monoblock Service Trolley
288 Ingredient Bin
288 Adjustable Dish Dolly
288 Plate Rack Mobile
288 Meat Carrying Dolly
289 Utility Rack
290 Sdx Thermobox
291 Perforated Shelf
292/293 Perforated Shelf W/4 Floor

11 Dish Washing

296 Compartment Base
296 Cutlery Rack
296 Glass Rack
296 Plate/trays Rack
297 Compartment Extender
297 Dolly
298 Insect Killers Electrical
299 Dish Washing
299 Rubbish Bin
299 Sink

Cooking

- 3 Independent Safety Valves for Security
- Blowoff valve consists of 3 positions: 1. and 2. position is for cooking, 3. position is for blowoff
- Innovative Lid with Easy to Use Locking System
- Impact Bonded Sandwich Bottom
- Fast and Efficient Heat Disribution
- Heat Resistant Side Handles
- 18/10 Stainless Steel, 1,20 mm thickness
- Easy Cleaning With Removable Lid Attachments

» Pressure Cooker

Code	Øxh (cm)	Lt
32384025	40x25	32
32384030	40x30	37
32384040	40x40	50

Code	Model	Ø (cm)
35700040	Pressure Cooker Lid	40
35700155	Silicone Seal	40

CERAMIC ELECTRIC INDUCTION GAS DISHWASHER

Pressure Cooker

Safety Valve

Steam Release

» Pressure Cooker

Code	Øxh (cm)	Lt
32383219	32x19	15
32383223	32x23	18
32383230	32x30	23

Code	Model	Ø (cm)
35700032	Pressure Cooker Lid	32
35700154	Silicone Seal	32

CERAMIC ELECTRIC INDUCTION GAS DISHWASHER

- 2 Independent Safety Valves for Security
- Blowoff valve consists of 3 positions: 1. and 2. position is for cooking, 3. position is for blowoff
- Innovative Lid with Easy to Use Locking System
- Impact Bonded Sandwich Bottom
- Fast and Efficient Heat Disribution
- Heat Resistant Side Handles
- 18/10 Stainless Steel, 1,20 mm thickness
- Easy Cleaning With Removable Lid Attachments

TECHNICAL SPECIFICATIONS

Made of high-quality,robust 18/10 stainless steel pots and pans are designed for long run in hard conditions of Professional Kitchens.
Three layers base of each product is compressed with the IMPACT BONDING* method at a high pressure which results with the non separable layers and even heat distribution.
Handles are tack welded up to 10 points for the strongest holding.
Easy to grasp stainless steel stay-cool handles
Extra helper handling at sizes over Q 32,a special design for Professional use only.
Suitable to all kind of stove tops including induction*
Dishwasher safe

- KAPP stands out with "IMPACT BONDED" three layer sandwich bottom in all lines and sizes.
- KAPP is the only brand which offers "induction ready"cookware in ALL sizes.

DESIGN

-Perfect balance and ergonomy
-Pure sophistication
-Perfectionist approach in every single detail

QUALITY

KAPP products are extremely robust.Tried and tested up to the highest standards.By leveraging our strengths in product design,packaging and distribution;we provide unique,innovative solutions for Professional Kitchens.

KAPP products are manufactured by means of attentive production processes and only delivered after strict quality controls.

All the procedures are monitored by our Quality Management System which is certified by TUV, GOST, HACCP and CE internationally.

"The Great Lake Culinary Institute Laboratories"in USA ,tested and approved our quality and classified KAPP products within the best quality product ranges in the world.

Three layer base of each pot is compressed with ''IMPACT'' method at a pressure of 2500 tons.

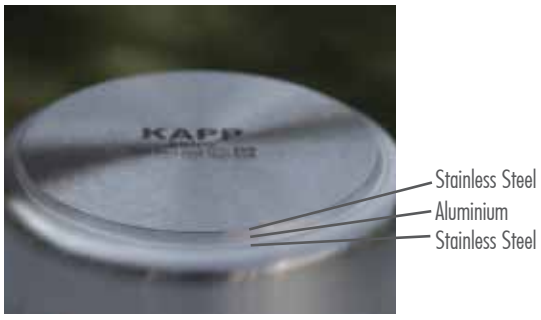

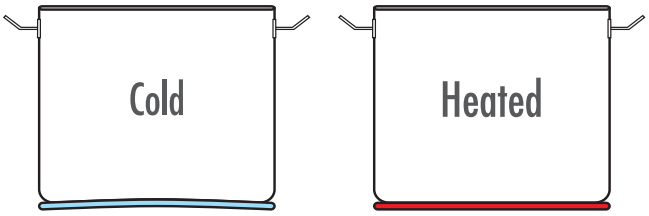

IMPACT BONDING + INDUCTION READY

IMPACT BONDED BOTTOMS COOKS BEST. CERTIFIED NATIONAL INDEPENDENT TEST RESULT

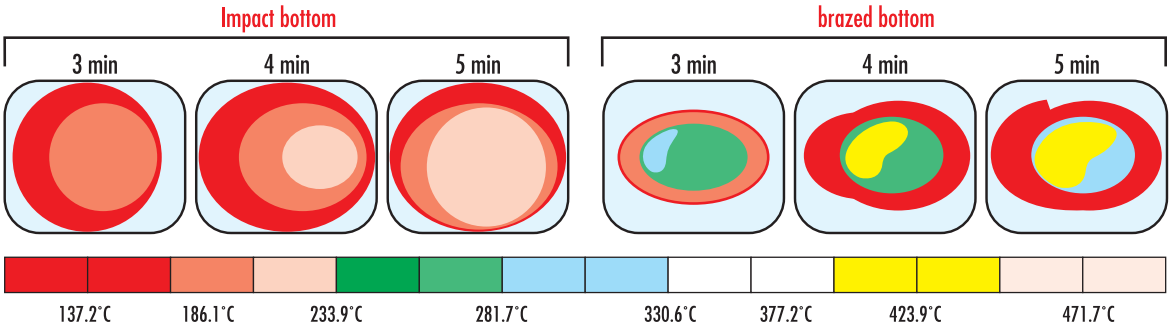

- Forged to bond by press over 2500 tons.
- Purity of aluminium over 95%.
- Over 99% of bonding between 3 layered bottom

- Brazed to bond by brazing machine.
- Purity of aluminium normal.
- Over 55% of bonding between 3 layered bottom

Excellent
Even cooking
Even temperature
Easy to clean

Food sticks and burn
Uneven temperature
Difficult to clean

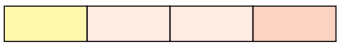

Food sticks and burn
Higher heat
Extremely uneven
Very difficult to clean
Probably will damage the pan

Bistro

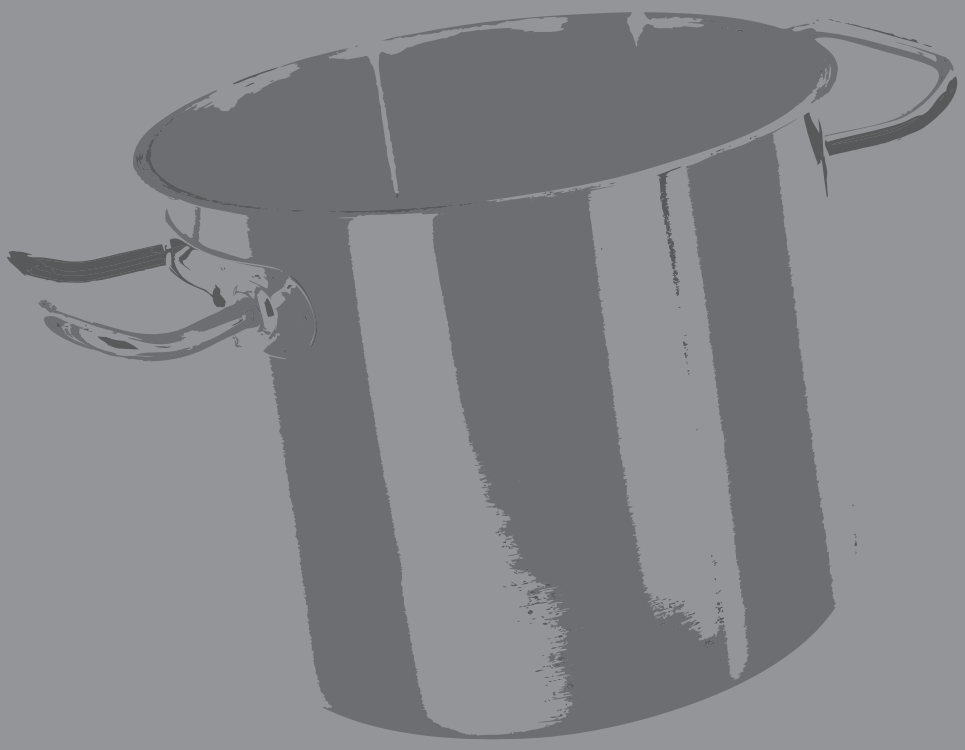

Bistro Line

- Stainless steel body designed for professional use usable at all hobs
- Limited size range
- Aliminum sandwich base for perfect heat diffusion
- Sandwich base produced with impact bonding technique for heavy duty use and even cooking
- Special welded stainless steel handles for heavy duty use
- Heat resistant handles
- HACCP certified qualifies w hygiene standards

Stock Pots/Casseroles (Bistro Line)

» Jumbo Stock Pot

Kod	Øxh (cm)	Lt
30151616	16x16	3,0
30152020	20x20	6,0
30152424	24x24	10,5
30152828	28x28	17,2
30153232	32x32	25,7

» Stock Pot

Kod	Øxh (cm)	Lt
30151615	16x14,5	2,9
30152017	20x17	5,3
30152419	24x19,5	8,8
30152823	28x23	14,2
30153228	32x27,5	22,1
30153629	36x29	29,5
30154528	45x28	44,0
30155030	50x30	58,0

» Deep Casseroles

Kod	Øxh (cm)	Lt
30151611	16x11	2,0
30151812	18x12	3,0
30152013	20x13	4,1
30152415	24x15	7,0
30152817	28x17	11,0
30153219	32x19	15,0
30153622	36x22	23,0
30154025	40x25	32,0
30154522	45x22	35,0

» Shallow Casseroles

Kod	Øxh (cm)	Lt
30151607	16x7	1,4
30151808	18x8	2,0
30152009	20x9	3,0
30152411	24x10,5	5,0
30152812	28x12	7,4
30153215	32x15	12,1
30153617	36x17	17,3
30154019	40x19	25,0
30155020	50x20	39,3

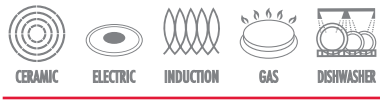

» Shallow Stew Pan

Kod	Øxh (cm)	Lt
30152807	28x7	4,3
30153208	32x7,5	6,0
30153608	36x8	8,1
30154008	40x8	10,0

» Sauce Pan

Kod	Øxh (cm)	Lt
30150008	16x11	2,2
30150004	18x12	3,1
30150005	20x13	4,0
30150006	24x15	7,0
30150020	28x17	11,0
30150030	32x15	12,1
30150015	16x7	1,4
30150018	18x8	2,0
30150017	20x9	3,0
30150014	24x10,5	5,0

*Ø28, Ø32 w/helper handle

» Fry Pan

Kod	Øxh (cm)	Lt
30152004	20x5	1,4
30152405	24x5,5	2,0
30152806	28x6	3,0
30153206	32x7	5,0
30153606	36x7	8,1
30154007	40x8	10,1

» Lids

Kod	Øxh (cm)
30110016	16
30110018	18
30110020	20
30110024	24
30110028	28
30110032	32
30110036	36
30110040	40
30110045	45
30110050	50

Exclusive

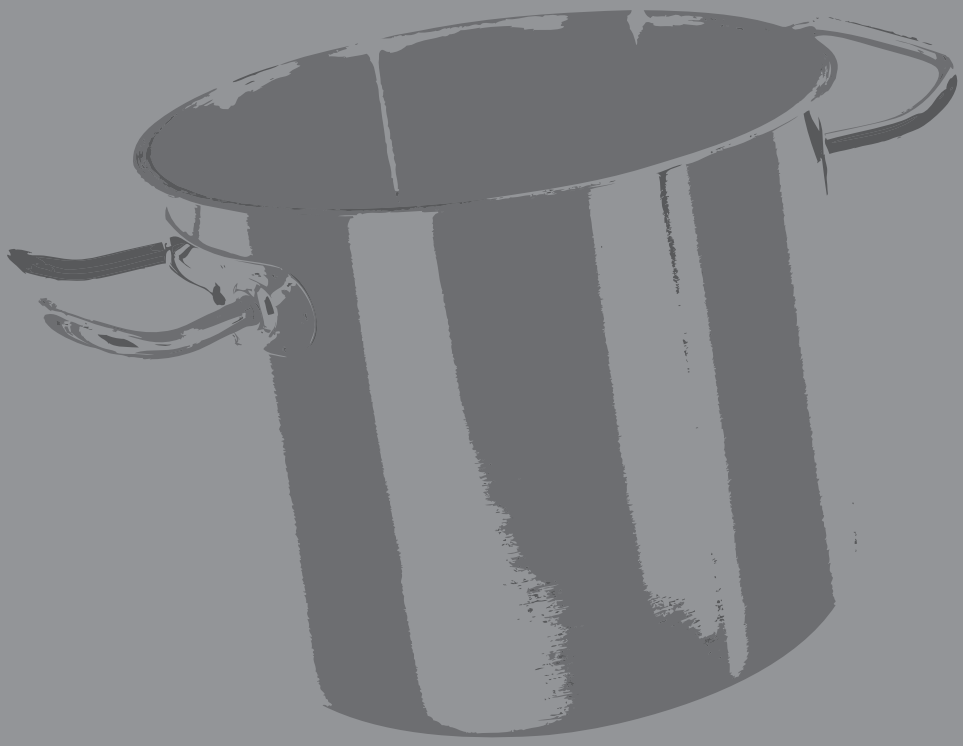

Exclusive Line

- Thick AISI 304 stainless steel body designed for professional use
- Usable at all hobs
- Aliminum sandwich base for perfect heat diffusion
- Sandwich base produced with impact bonding technique for heavy duty use and even cooking
- Special welded stainless steel handles for heavy duty use
- Heat resistant handles
- HACCP certified qualifies w hygiene standards

Stock Pots/Casseroles (Exclusive Line)

» Jumbo Stock Pot

Code	Øxh (cm)	Lt
30311616	16x16	3,0
30312020	20x20	6,3
30312424	24x24	10,5
30312828	28x28	17,2
30313030	30x30	21,2
30313231	32x32	26,0
30313635	36x36	36,6
30314038	40x40	50,0
30314544	45x45	70,0
30315050	50x50	100,0
30316055	60x55	155,4

» Stock Pot

Code	Øxh (cm)	Lt
30311615	16x14,5	2,9
30312017	20x17	5,3
30312419	24x19,5	8,8
30312823	28x23	14,2
30313024	30x24	17,0
30313228	32x27,5	22,1
30313629	36x29	29,5
30314032	40x32	40,0
30314528	45x28	44,0
30315030	50x30	58,0
30316035	60x35	99,0

» Deep Casseroles

Code	Øxh (cm)	Lt
30311611	16x11	2,0
30311812	18x12	3,0
30312013	20x13	4,1
30312214	22x14	5,0
30312415	24x15	7,0
30312817	28x17	11,0
30313020	30x20	14,1
30313219	32x19	15,0
30313622	36x22	23,0
30314025	40x25	32,0
30314522	45x22	35,0
30316025	60x25	70,0

» Shallow Casseroles

Code	Øxh (cm)	Lt
30311607	16x7	1,4
30311808	18x8	2,0
30312009	20x9	3,0
30312210	22x9,5	3,6
30312411	24x10,5	4,7
30312613	26x13	6,5
30312812	28x12	7,4
30313015	30x12	10,6
30313215	32x15	12,1
30313617	36x17	17,3
30314019	40x19	25,0
30315019	50x20	39,3

CERAMIC ELECTRIC INDUCTION GAS DISHWASHER

» Shallow Stew Pan

Code	Øxh (cm)	Lt
30312807	28x7	4,3
30313208	32x7,5	6,0
30313608	36x8	8,1
30314008	40x8	10,0
30314510	45x10	15,9
30315010	50x10	20,0
30316010	60x10	28,3

» Deep Sauce Pan

Code	Øxh (cm)	Lt
30380008	16x11	2,2
30380004	18x12	3,1
30380005	20x13	4,1
30380019	22x14	5,3
30380006	24x15	6,8
30380020	28x17	10,5
30380021	30x12	8,5
30380030	32x15	12,1

*ø28, Ø30, Ø32 W/helper Handle

» Shallow Sauce Pan

Code	Øxh (cm)	Lt
30380007	12x6	0,7
30380010	14x7	1,1
30380015	16x7	1,4
30380018	18x8	2,0
30380017	20x9	2,8
30380016	22x9,5	3,6
30380014	24x10,5	4,7
30380027	26x13	6,5

» Colander Sauce Pan

Code	Øxh (cm)
31380005	20x13
31380006	24x15
31380020	28x17

» Lids

Code	Lt
30210112	12
30210114	14
30210116	16
30210118	18
30210120	20
30210122	22
30210124	24
30210126	26
30210128	28
30210130	30
30210132	32
30210136	36
30210140	40
30210145	45
30210150	50
30210160	60

» Colander

Code	Øxh (cm)
30423609	36x9
30423812	38x12
30424512	45x12
30425012	50x12
30426012	60x14
30427014	70x14
30428016	80x14

CERAMIC ELECTRIC INDUCTION GAS DISHWASHER

» Pasta Colander Set

Code	Dimensions (cm)	Capacity (Lt)
36312420	(w/3 Colanders)	8,0
36313623	(w/4 Colanders)	22,4
36314026	(w/4 Colanders)	32,0

» 1/4-Segment Pasta Colander

Code	Description
36302420	Suitable for 24x19,5 Pot
36303623	Suitable for 36x22 Pot
36304026	Suitable for 40x25 Pot

» Couscous Set w/Lid

Code	Øxh (cm)	Capacity (Lt)
35614032	A 40x24 B 32x32	30,0
35615040	A 50x24 B 40x40	47,0
35616045	A 60x24 B 45x45	67,8
35616050	A 60x24 B 50x50	67,8

» Couscous Colander

Code	Øxh (cm)
35664032	40x24
35665040	50x24
35666045	60x24

CERAMIC ELECTRIC INDUCTION GAS DISHWASHER

Wide Shallow Pots w/Lid

Code	Øxh (cm)	Lt
30013015	30x15	13
30013615	36x15	16
30013620	36x20	21
30013820	38x20	24
30014017	40x17	24
30014520	45x20	29
30015020	50x20	36
30015520	55x20	40
30016020	60x20	45
30016025	60x25	65
30016525	65x25	75
30017030	70x30	108
30018030	80x30	136
30019030	90x30	166
30010035	100x35	258
30011035	110x35	289

Lids

Code	Øxh (cm)	Lt
30013015	30x15	13
30013615	36x15	16
30013620	36x20	21
30013820	38x20	24
30014017	40x17	24
30014520	45x20	29
30015020	50x20	36
30015520	55x20	40
30016020	60x20	45
30016025	60x25	65
30016525	65x25	75
30017030	70x30	108
30018030	80x30	136
30019030	90x30	166
30010035	100x35	258
30011035	110x35	289

Wide Shallow Pan w/o Lid

Code	Øxh (cm)	Lt
30323008	30x8	5,0
30323609	36x9	9,0
30323812	38x12	13,5
30324012	40x12	15,7
30324512	45x12	19,0
30325012	50x12	23,0
30326014	60x14	34,0
30327015	70x14	53,5
30328016	80x16	73,0

- Triple enamel coating that ensures hygiene
- Vapor binding cover, prevents the loss of vitamins and minerals
- It absorbs heat rapidly and protects it for a long time
- Also good for food presentation at buffets
- Energy saving is provided by perfect thermal conductivity and balanced heat distribution
- Cut and scratch resistant surface provides the convenience of using metal equipments
- Suitable for all kinds of energy hobs and ovens
- Non – stick, easy to clean

» Mini Pot

Code	Model	Lt	Ø (cm)
48011110	Pot	0,35	10
48013110	Wooden Base for 1 Pot		
48014110	Wooden Base for 3 Pot		

480 481 482

» Pot

Code	Model	Lt	Ø (cm)
48011120	Pot	2,56	20
48013120	Wooden Base		
48011124	Pot	4,93	24
48013124	Wooden Base		
48011128	Pot	6,80	28
48013128	Wooden Base		

480 481 482

» Shallow Pot

Code	Model	Lt	Ø (cm)
48011424	Pot	2,40	24
48013424	Wooden Base		
48011428	Pot	3,40	28
48013428	Wooden Base		

480 481 482

» Eliptical Pot

Code	Model	Lt	Dim.(cm)
48011533	Pot	5,00	34x15
48013533	Wooden Base		

480 481 482

Roasteasy

- Measuring 40x40 cm Roasteasy covers the largest chicken or smaller size roast joint
- Great alternative to tinfoil
- Allows venting and not sweating
- Allows perfect browning and crisping
- Reduces burning
- Roasteasy can be used during or after cooking
- Ideal for use in convection ovens
- Ideal for cooking meats, chicken or fish
- Can be used for barbecuing steaks & prawns also be used as an ideal diffuser on the barbecue
- Reduces shrinkage
- Retains natural juices and enhances flavours
- Maintains texture and shape for perfect carving
- Roasteasy is a reusable whole of lifetime product
- Stays warm allowing your roast to rest & relax without losing its heat
- Roasteasy is dishwasher proof, easy-clean and reduces fat spit and spray in oven interiors

» Stainless Steel Roasteasy

Code	Dimensions (cm)
65620001	40x40

Roasting Pan w/Clip-on Cover

Code	Dims. (cm)
30714565	40x60x5
30714568	40x60x8
30714561	40x60x10
30715355	50x35x5
30715358	50x35x8
30715310	50x35x10
30715705	50x70x5
30715708	50x70x8
30715710	50x70x10

Tapered Roasting Pan

Code	Dims. (cm)
30704565	40x60x5
30704568	40x60x8
30704561	40x60x10
30705355	50x35x5
30705358	50x35x8
30705310	50x35x10
30705705	50x70x5
30705708	50x70x8
30705710	50x70x10

Round Roasting Pan (S/S)

Code	Øxh (cm)
30703805	36x5
30704505	45x5
30705005	50x5
30706005	60x5

Aluminium Pizza Tray

Code	Ø (cm)
43010018	18
43010020	20
43010022	22
43010024	24
43010026	26
43010028	28
43010030	30
43010032	32
43010040	40

» Aluminium (Nonstick)

Code	Dims. (cm)
50034030	40x30x8,0

» Enamel Coated

Code	Dims. (mm)	Model	Lt
31811020	530x325	1/1-20	2,5
31811040	530x325	1/1-40	5
31811065	530x325	1/1-65	9

» Ceramic Coated (Steel)

Code	Dims. (mm)	Model	Lt
31911020	530x325	1/1-20	2,5
31921020	650x530	2/1-20	5

» Nonstick GN (Stainless)

Code	Dims. (mm)	Model	Lt
31311020	530x325	1/1-20	2,5
31321020	650x530	2/1-20	5

» Nonstick GN (Aluminium)

Code	Dims. (mm)	Model	Lt
31311030	530x325	1/1-20	2,5
33121030	650x530	2/1-20	5

Ipinium Roasting Pans

Ipinium® Roasting Pans

- Patented aluminum alloy & high class non stick coating
- Oil free - healtier & juicier cooking
- Faster cooking
- Also recommended for bread baking
- Optimal retention and heat transmission
- Easy cleaning
- Dish washer safe

*Patented

1/1 Roasting Pan

Code	Dims. (mm)	Model
11151120	530x325	1/1 - 20
11151140	530x325	1/1 - 40
11151160	530x325	1/1 - 60

1/2 Roasting Pan

Code	Dims. (mm)	Model
11151220	325x365	1/2 - 20
11151240	325x365	1/2 - 40
11151260	325x365	1/2 - 60

2/3 Roasting Pan

Code	Dims. (mm)	Model
11152320	354x325	2/3 - 20
11152340	354x325	2/3 - 40

1/3 Roasting Pan

Code	Dims. (mm)	Model
11151340	325x176	1/3 - 40

1/6 Roasting Pan

Code	Dims. (mm)	Model
11151660	176x162	1/6 - 60

Grill Grid

Code	Dims. (mm)	Model
11150011	530x325	1/1

Stainless Steel Pans

- Stainless Steel 18/10 body
- Heat Resistant Stainless Steel Professional Handles
- Impact bonded sandwich bottom
- Multiple size options for varidus cooking
- Even Heat Distribution
- Satin Finishing

Stainless Steel Pans (Exclusive Line)

» Paella Pan

Code	Øxh (cm)	Lt
30362004	20x5	1,6
30362405	24x5,5	2,5
30362806	28x6	3,7
30363207	32x6,5	6,0
30363608	36x7,5	8,1
30364008	40x8	10,1

» French Omlette Pan

Code	Øxh (cm)
30315014	14x3
30315016	16x3
30315018	18x3
30315020	20x3
30315022	22x3
30315024	24x3
30315028	28x3
30315032	32x3

» Frypan

Code	Øxh (cm)	Lt
30412004	20x4	1,6
30412405	24x4,5	2,5
30412806	28x5	3,7
30413207	32x5,5	6,0
30413608	36x6	8,1
30414008	40x6,5	10,1

» Conical Saute Pan

Code	Øxh (cm)	Lt
30431606	16x6	0,75
30431806	18x6,5	1,0
30432006	20x7	1,9
30432406	24x8	2,5

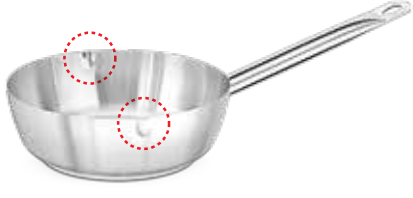

» Conical Saute Pan w/Double Spouts

Code	Øxh (cm)	Lt
30351606	16x6	0,75
30351806	18x6,5	1,0
30352007	20x7	1,9
30352408	24x8	2,5

» Non-stick Coated Conical Saute Pan

Code	Øxh (cm)	Lt
30331605	16x6	0,75
30331805	18x6,5	1,0
30332005	20x7	1,9
30332405	24x8	2,5

*Ø 32, Ø 36, Ø 40 W/helper Handle

» Saute Pan

Code	Øxh (cm)	Lt
30452004	20x5,0	1,6
30452405	24x5,5	2,5
30452805	28x6,0	3,7
30453207	32x7,5	6,0
30453606	36x8,0	8,1

» Non-stick Coated Fry Pan

Code	Øxh (cm)	Lt
30342004	20x5	1,6
30342405	24x5,5	2,5
30342805	28x6	3,7
30343207	32x7	6,0
30343608	36x7	8,1

* Not suitable for induction

Deep Sauce Pan

Code	Øxh (cm)	Lt
» 30380008	16x11	2,2
30380004	18x12	3,1
30380005	20x13	4,1
30380019	22x14	5,3
30380006	24x15	6,8
30380020	28x17	10,5
30380021	30x12	8,5
30380030	32x15	12,1

» Shallow Sauce Pan

Code	Øxh (cm)	Lt
30380007	12x6	0,7
30380010	14x7	1,1
30380015	16x7	1,4
30380018	18x8	2
30380017	20x9	2,8
30380016	22x9,5	3,6
30380014	24x10,5	4,7
30380027	26x13	6,5

» Colander for Sauce Pan

Code	Øxh (cm)
31380005	20x13
31380006	24x15
31380020	28x17

Ceramic Coated Aluminum Pans

- Latest in Non Stick Technology
- Eco Friendly: PFOA Free
- Excellent Heat Conductivity compared to traditional non stick materials
- Does not deteriorate due to dry heating of pans
- Induction Compatible
- Easy to Clean Surfaces
- Hygienic

CERAMIC ELECTRIC INDUCTION GAS DISHWASHER

Ceramic Fry Pan

Code	Øxh (cm)
50042005	20x4,5

Ceramic Creppe Pan

Code	Øxh (cm)
50042502	25x2
50042802	28x2

Ceramic Wok Pan

Code	Øxh (cm)
50042407	24x6,5
50042807	28x7
50043008	30x8

Aluminum Non Stick Pans (Platinium Teflon)

- Made from Special 3003 alloy aluminium
- Stay Cool Stainless Steel Pipe Handles with professional riveting fixing
- Made for Avid Chefs who demand Quality
- Eco Friendly: PFOA Free
- Suitable for induction

CERAMIC ELECTRIC INDUCTION GAS DISHWASHER

Aluminum Non Stick Fry Pan

Code	Ø (cm)
12021020	20
12021024	24
12021028	28
12021032	32
12021036	36
12021040	40

Aluminum Non Stick Creppe Pan

Code	Ø (cm)
12123024	24
12123028	28

Aluminum Non Stick Wok Pan

Code	Ø (cm)
12144024	24
12144028	28
12144030	30

Carbon Steel Pans (Heavy Duty)

- This high quality, carbon steel pan is suitable for searing, as its thickness allows for long re-heating at high temperatures
- Steel cookware achieves and maintains both very low and very high temperatures, making these pans a highly effective and versatile cooking piece
- This pan has a flat iron handle affixed with rivets
- The 1/8" (3mm) thickness is uniform throughout the pan
- Suitable for induction

» Carbon Steel Fry Pan

Code	Ø (cm)	Thickness (mm)
50050020	20	3,0
50050024	24	3,0
50050028	28	3,0
50050032	32	3,0

» Carbon Steel Wok Pan

Code	Ø (cm)	Thickness (mm)
50051032	32	3,0

» Carbon Steel Blinis Pan

Code	Ø (cm)	Thickness (mm)
50050012	12	2,0

» Bamboo Base w/High Heat Magnet

Code	Ø (cm)
50010001	12

Carbon Steel Pans Non Stick Coated

- Non Stick Coated to control rust
- Perfect for seasoning and searing meats
- Professional Riveted Flat Steel Handles for easy handling
- Long Lasting
- Induction Compatible

CERAMIC ELECTRIC INDUCTION GAS DISHWASHER

» Non-Stick Carbon Steel Fry Pan

Code	Ø (cm)
50010226	26
50010230	30

» Non-Stick Carbon Steel Paella Pan

Code	Ø (cm)
50010022	22
50010026	26
50010034	34

» Non-Stick Carbon Steel Creppe Pan

Code	Ø (cm)
50010024	24
50010028	28

» Wok Pan w/Wooden Handle

Code	Ø (cm)
50018024	24
50018026	26
50018030	30

» Non-Stick Carbon Steel Square Grill

Code	Dims. (cm)
50012424	24x24
50012828	28x28

» Silicone Cover for Handle

Code
50010000

* Suitable for Carbon Steel NonStick Coated Pans and Carbon Steel HEavy Duty Pans

Cast Iron Pans

- Good for meat searing
- Triple enamel coating that ensures hygiene
- It absorbs heat rapidly and protects it for a long time
- Also good for food presentation at buffets
- Energy saving is provided by perfect thermal conductivity and balanced heat distribution
- Cut and scratch resistant surface provides the convenience of using metal equipments
- Suitable for all kinds of energy hobs and ovens
- Non - stick, easy to clean

» Fajita Pan

Code	Model	Dims. (cm)
48011824	Pan	18,5x24,5
48021824	Wooden Base	
48011529		15x29,5
48021529	Wooden Base	

» Fish Pan

Code	Model	Dims. (cm)
48011524	Pan	15x24,5
48021524	Wooden Base	

» Iron Sheet Roasting Pan

Code	Model	Ø (cm)
48018020	Pan	20
48028020	Wooden Base	
48018028	Pan	28
48028028	Wooden Base	

» Pizza-Creppe-Pancake Pan

Code	Model	Ø (cm)
48011220	Pan	20
48021220	Wooden Base	
48011227	Pan	28
48021228	Wooden Base	

» Grill Tray Pan

Code	Model	Dims. (cm)
48012230	Pan	22x30
48022230	Wooden Base	
48012640	Pan	26x40
48022640	Wooden Base	

480 **481** **482**

» Round Pan

Code	Model	Ø (cm)
48010016	Pan	16
48020016	Wooden Base	
48010020	Pan	20
48020020	Wooden Base	
48021016	Ceramic Sauce Cup	

» Grill Pan (1 Portion)

Code	Model	Dims. (cm)
48011616	Pan	16x16
48021616	Wooden Base	

» Mini Grill Pan

Code	Model	Dims. (cm)
48011522	Pan	15x22
48021522	Wooden Base	

» Rectangular Grill Pan

Code	Model	Dims. (cm)
48012647	Pan	26x47
48022647	Wooden Base	

» Square Grill Pans

Code	Model	Dims. (cm)
48012626	Pan	26x26
48022626	Wooden Base	

» Semi Grill/Semi Flat Pan

Code	Model	Dims. (cm)
48002632	Pan	26x32
48022732	Wooden Base	

» Ribbed Skillet

Code	Model	Dims. (cm)
48032632	Pan	26x32
48042632	Wooden Base	

480 **481** **482**

» Ribbed Frying Pan

Code	Model	Ø (cm)
48011224	Pan	24
48013224	Wooden Base	
48011228	Pan	28
48013228	Wooden Base	

480 **481** **482**

» Frying Pan

Code	Model	Ø (cm)
48011324	Pan	24
48013324	Wooden Base	
48011328	Pan	28
48013328	Wooden Base	

480 **481** **482**

» French Omlette Pan

Code	Model	Ø (cm)
48011322	Pan	22
48013322	Wooden Base	

480 **481** **482**

GN 1/4 - 65

Preparing

GN Food Pans

		Code	Depth (mm)	Lt
	2/1 650x530	31021010 31021020 31021040 31021065 31021100 31021150 31021200	10 20 40 65 100 150 200	2,5 5,0 10,0 18,5 28,5 42,5 57,5
	1/1 530x325	31011010 31011020 31011040 31011065 31011100 31011150 31011200	10 20 40 65 100 150 200	1,25 2,5 5,0 9,0 14,0 21,0 28,0
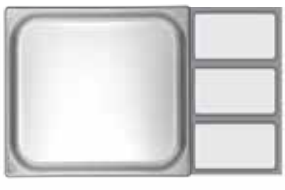	2/3 354x325	31023020 31023040 31023065 31023100 31023150 31023200	20 40 65 100 150 200	1,5 3,0 5,5 9,0 13,0 18,0
	1/2 325x265	31012020 31012040 31012065 31012100 31012150 31012200	20 40 65 100 150 200	1,25 2,0 4,0 6,5 9,5 12,5
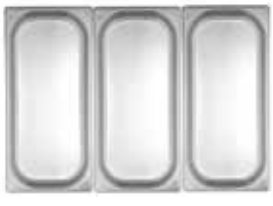	1/3 325x176	31013020 31013040 31013065 31013100 31013150 31013200	20 40 65 100 150 200	0,75 1,5 2,5 4,0 5,7 7,8

GN Food Pans

		Code	Depth (mm)	Lt
	1/4 265x162	31014020 31014040 31014065 31014100 31014150 31014200	20 40 65 100 150 200	0,5 1,0 1,8 2,8 4,0 5,5
	2/4 530x162	31024020 31024040 31024065 31024100	20 40 65 100	0,5 1,3 2,3 5,2
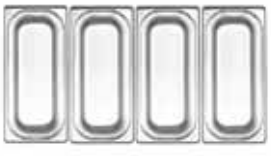	2/8 325x132	31028065 31028100	65 100	1,0 2,0
	1/6 176x162	31016065 31016100 31016150 31016200	65 100 150 200	1,0 1,6 2,4 3,4
	1/9 176x108	31019065 31019100	65 100	0,6 1,0

Perforated GN Food Pans

		Code	Depth (mm)
	2/1 650x530	30921020 30921040 30921065 30921100 30921150 30921200	20 40 65 100 150 200
	1/1 530x325	30911020 30911040 30911065 30911100 30911150 30911200	20 40 65 100 150 200
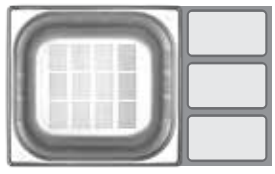	2/3 354x325	30923020 30923040 30923065 30923100 30923150 30923200	20 40 65 100 150 200
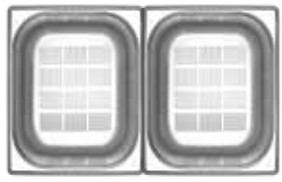	1/2 325x265	30912020 30912040 30912065 30912100 30912150 30912200	20 40 65 100 150 200

Perforated GN Food Pans

		Code	Depth (mm)
	1/3 325x176	30913020 30913040 30913065 30913100 30913150 30913200	20 40 65 100 150 200
	1/4 265x162	30914020 30914040 30914065 30914100 30914150 30914200	20 40 65 100 150 200
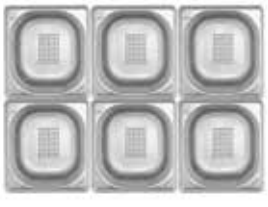	1/6 176x132	30916065 30916100 30916150 30916200	65 100 150 200

GN Food Pans w/Handle

		Code	Depth (mm)	Lt
	2/1 650x530	31121065 31121100 31121150 31121200	65 100 150 200	18,5 28,5 42,5 57,5
	1/1 530x325	31111065 31111100 31111150 31111200	65 100 150 200	9,0 14,0 21,0 28,0
	2/3 354x325	31123065 31123100 31123150 31123200	65 100 150 200	5,5 9,0 13,0 18,0
	1/2 325x265	31112065 31112100 31112150 31112200	65 100 150 200	4,0 6,5 9,5 12,5

GN Food Pans w/Handle

		Code	Depth (mm)	Lt
	1/3 325x176	31113065 31113100 31113150 31113200	65 100 150 200	2,5 4,0 5,7 7,8
	1/4 265x162	31114065 31114100 31114150 31114200	65 100 150 200	1,8 2,8 4,0 5,5
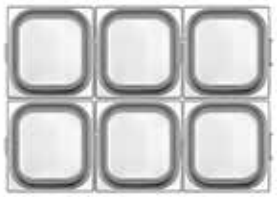	1/6 176x162	31116065 31116100 31116150 31116200	65 100 150 200	1,0 1,6 2,4 3,4

GN Food Pan's Lids

» Standard

Code	Model	Øxh (mm)
31921530	2/1	650x530
31911325	1/1	530x325
31923325	2/3	354x325
31924300	2/4	530x162
31928300	2/8	325x132
31912265	1/2	325x265
31913176	1/3	325x176
31914162	1/4	265x162
31916162	1/6	176x162
31919108	1/9	176x108

» Lid w/Handle Hole

Code	Model	Øxh (mm)
32100021	2/1	650x530
32100011	1/1	530x325
32100023	2/3	354x325
32100012	1/2	325x265
32100013	1/3	325x176
32100014	1/4	265x162
32100016	1/6	176x162

» Lid w/Ladle Hole

Code	Model	Øxh (mm)
32100121	2/1	650x530
32100111	1/1	530x325
32100123	2/3	354x325
32100112	1/2	325x265
32100113	1/3	325x176
32100114	1/4	265x162
32100116	1/6	176x162

plast|port®

plast|port®

» Lid w/Hermatic Seal

Code	Model	Øxh (mm)
31923311	1/1	530x325
31923312	1/2	325x265
31923313	1/3	325x176
31923314	1/4	265x162

» PC Lid w/Hermatic Seal

Code	Model	Øxh (mm)
46011011	1/1	530x325
46011012	1/2	325x265

» PC GN Lid

Code	Model	Øxh (mm)
46010011	1/1	530x325
46010012	1/2	325x265
46010013	1/3	325x176
46010014	1/4	265x162
46010016	1/6	176x162
46010019	1/9	176x108

plast|port

plast|port

GN Ice Cream Pan

Code	Dim. (mm)
31236065	360x170x65
31236100	360x170x100
31236120	360x170x120
31236150	360x170x150

PP GN Ice Cream Pan

Code	Dim. (mm)	Lt
46010002	360x170x110	4,5

PC GN Ice Cream Pan

Code	Dim. (mm)	Lt
46010001	360x170x110	4,5

Appetizer Pan

Code	Dim. (mm)
35011929	195x295x35
35012333	230x330x42
35012538	257x380x47
35012843	285x430x51
35013253	325x530x52

Ceramic Coated (Steel) Pan

Code	Dim. (mm)	Model	Lt
31911020	530x325	1/1-20	2,5
31921020	650x530	2/1-20	5

Enamel Coated Pan

Code	Dim. (mm)	Model	Lt
31811020	530x325	1/1-20	2,5
31811040	530x325	1/1-40	5
31811065	530x325	1/1-65	9

plast|port

Nonstick GN Pan (S/S)

Code	Dim. (mm)	Model	Lt
31311020	530x325	1/1-20	2,5
31321020	650x530	2/1-20	5

Nonstick GN Pan (Aluminium)

Code	Dim. (mm)	Model	Lt
31311030	530x325	1/1-20	2,5
33121030	650x530	2/1-20	5

PP Dough Tray

Code	Dim. (mm)	Lt
46010026	400x600x77	16,8

» GN 1/1 Porcelain Food Pan

Code	Dim. (mm)
70020101	530x325

» GN 1/2 Porcelain Food Pan

Code	Dim. (mm)
70020102	325x265

» GN 2/3 Porcelain Food Pan

Code	Dim. (mm)
70020203	354x325

» GN 1/3 Porcelain Food Pan

Code	Dim. (mm)
70020103	325x176

» Round Porcelain Food Pan

Code	Dim. (cm)
70020100	39x6,5

» Round Divided Porcelain Food Pan

Code	Dim. (cm)
70021100	39x6,5

» Round Food Pan (S/S)

Code	Dim. (cm)
70023100	38,5x38,5x6,5

» Round Divided Food Pan (S/S)

Code	Dim. (cm)	Lt
30703565	35x6,5	6,2

» Süzgeç Taban

Code	Dim. (mm)	Model
80026565	465x265	1/1
80026523	285x265	2/3
80026520	265x220	1/2
80026515	265x115	1/3

» Tel Izgara

Code	Dim. (mm)	Model
80022530	530x325	GN 1/1 (304 Cr Ni 18/10)
80026530	650x530	GN 2/1 (304 Cr Ni 18/10)
80025425	600x400	Wire Grid (304 Cr Ni 18/10)
50701530	530x325	GN 1/1 (201 Cr Ni 18/02)
50701650	650x530	GN 2/1 (201 Cr Ni 18/02)
50701600	600x400	Wire Grid (201 Cr Ni 18/02)

» Gastronom Süzgeç

Code
30900000

* GN Küvet fiyata dahil değildir.

» GN 1/1 Yükseltici

Code	Dim. (mm)
54010002	530x325

* GN Pan not included

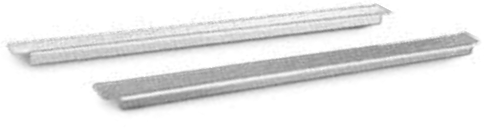

» Sıcak Kap / GN Tutucu S/S

Code
62010041

» GN Destek Aparatı

Code	Dim. (mm)	Model
50020032	325	GN 1/1
80020053	530	GN 2/1

* Non-slip silicones on the bottom corners.

Melamine GN Pans

- Heat resistant - 70° / + 120° C
  (Shock resistant up to 120° C)
- Corrosion resistant
- Light weight
- Break resistant
- Deformation free
- Toxic free
- Odor free
- Low heat conducter
- Dishwasher safe

*Not suitable for direct flame or any cooking type

Melamine GN Pans				
		Code	Depth (mm)	Lt
	1/1 530x325	58001120 58001140 58001165 58011100	20 40 65 100	1,3 4,0 7,1 10,2
	1/2 325x265	58001220 58001240 58001265 58012100	20 40 65 100	0,8 1,65 3,4 5,5
	1/3 325x176	58001320 58001365 58013100	20 65 100	0,5 2,0 3,15
	1/4 265x162	58001420 58001465 58014100	20 65 100	0,5 1,35 2,0
	1/6 176x162	58001665 58016100	65 100	0,8 1,25
	1/9 176x108	58001965	65	0,6

plast port®

PC

C° -40/+99

Polycarbonate GN Pans

- High impact resistance, unbreakable
- No corner and border deformation due to high impact resistance
- High acid-proof, impenetrable
- Heat endurance beetween +100°C /-40°C
- Suitable for microwave oven
- Stackable one within the other
- Light , easy to carry
- No hazardous substances on human health
- Easy to use due to the transparent structure

plast port®

Polycarbonate Transparent GN Pans

		Code	Depth (mm)
	1/1 530x325	46011065 46011100 46011150 46011200	65 100 150 200
	Lid	46010011	
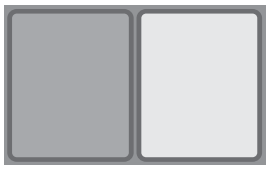	1/2 325x265	46012065 46012100 46012150 46012200	65 100 150 200
	Lid	46010012	
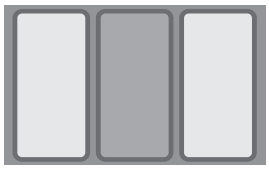	1/3 325x176	46013065 46013100 46013150	65 100 150
	Lid	46010013	
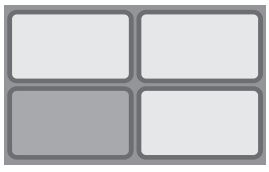	1/4 265x162	46014065 46014100 46014150	65 100 150
	Lid	46010014	
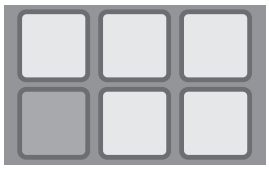	1/6 176x162	46016065 46016100 46016150	65 100 150
	Lid	46010016	
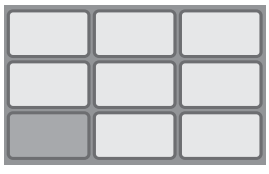	1/9 176x108	46019065 46019100 46019150	65 100 150
	Lid	46010019	

Polycarbonate Black GN Pans

		Code	Depth (mm)
	1/1 530x325	46111065 46111100 46111150 46111200	65 100 150 200
	Lid	46010011	
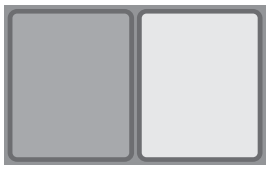	1/2 325x265	46112065 46112100 46112150 46112200	65 100 150 200
	Lid	46010012	
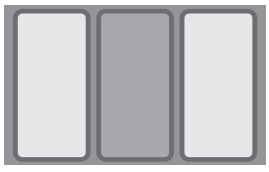	1/3 325x176	46113065 46113100 46113150	65 100 150
	Lid	46010013	
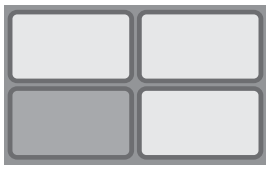	1/4 265x162	46114065 46114100 46114150	65 100 150
	Lid	46010014	
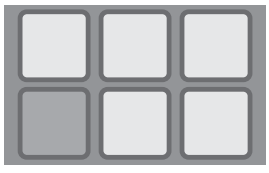	1/6 176x162	46116065 46116100 46116150	65 100 150
	Lid	46010016	
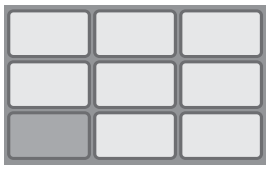	1/9 176x108	46119065 46119100 46119150	65 100 150
	Lid	46010019	

PC Square Food Storage Container w/Graduations

- Saklama, hazırlık, servis ve taşıma için idealdir
- Kırılmaz polikarbonattan imal edilmiştir
- Kırılmaz, çatlamaz, bükülmez ve çökme yapmaz
- 40°C' den 99°C' ye kadar dirençlidir
- Lt ve Qt ölçeği envanter düzeni için kullanışlıdır
- Kolay temizlenebilir

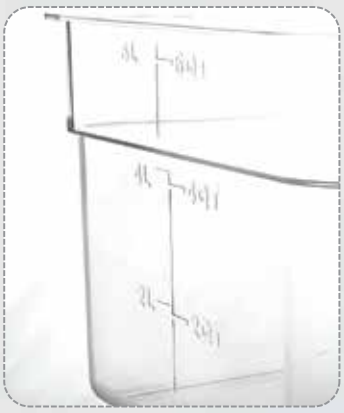

PC Square Food Storage Container w/Graduations

» 18 Lt.

Code	Dim. (cm)
62030018	28,5x28,5x32

» 12 Lt.

Code	Dim. (cm)
62030012	28,5x28,5x21

» 8 Lt.

Code	Dim. (cm)
62030008	22,5x22,5x23

» 6 Lt.

Code	Dim. (cm)
62030006	22,5x22,5x19

» 3,8 Lt.

Code	Dim. (cm)
62030004	18,2x18,2x19

» 2 Lt.

Code	Dim. (cm)
62030002	18x18x10

» 1/1

Code	Dim. (mm)
46021065	1/1-65
46021100	1/1-100
46021150	1/1-150
46021200	1/1-200

» 1/2

Code	Dim. (mm)
46022065	1/2-65
46022100	1/2-100
46022150	1/2-150
46022200	1/2-200

» 1/3

Code	Dim. (mm)
46023065	1/3-65
46023100	1/3-100
46023150	1/3-150

» 1/4

Code	Dim. (mm)
46024065	1/4-65
46024100	1/4-100
46024150	1/4-150

» 1/6

Code	Dim. (mm)
46021665	1/6-65
46026100	1/6-100
46026150	1/6-150

» 1/9

Code	Dim. (mm)
46029065	1/9-65
46029100	1/9-100
46029150	1/9-150

A1

A2

A3

A

» A

Code	Model	Øxh (mm)	h (mm)	lt
31622235	A1	240x240	235	13
31622160	A2	240x240	160	9
31622075	A3	240x240	75	4
31622300	A (Lid)	240x240		

B1

B2

B3

B

» B

Code	Model	Øxh (mm)	h (mm)	lt
31611235	B1	155x155	235	5
31611160	B2	155x155	160	3,5
31611075	B3	155x155	75	1,5
31611300	B (Lid)	155X105		

C1

C2

C3

C

» C

Code	Model	Øxh (mm)	h (mm)	lt
31610160	C2	155x105	160	2,5
31610075	C3	155x105	75	1
31610055	C4	155x105	55	0,5
31610300	C (Lid)	155X105		

» Salad Spinner

Code	Capacity
46700020	20 Lt

» Turning Slicer Le Rouet Gourmet w/3 Knives

Code	Dim. (cm)
62050011	36x13,5x24,3

***3 Knives filaments: 1 mm, 2mm and 4 mm**

» Turning Slicer Plastic

Code	Dim. (cm)
62050010	32,5x15,3x22

- Multi-cuts : smooth slices, Juliennes, grate and zest
- Ultra-thin slices from 1 to 10 mm
- Robust and professional : in stainless steel
- V-shaped blade integrated
- Blades in pro. quality stainless steel
- Easy to use
- Complete safety thanks to the pusher, strorage box and receptable for vegetables
- Compact storage

» Mandoline

Code

63010025

- Exceptional cutting: Paper-thin and crispy slices of fruits and vegetables
- Adjustable cutting thickness
- Removable blade for easy cleaning
- Come w/3 interchangeable "comb" blades (2-3-4 mm) and a handle guard

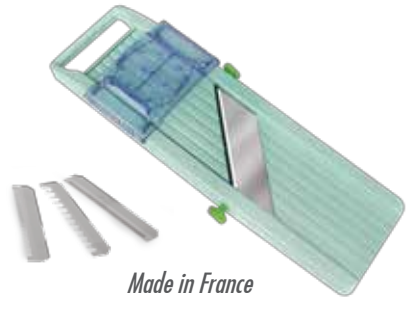

» Japanese Mandoline

Code

62050009

Made in France

» Tomato Slicer

Code
62050007

» Vegetable Wedger

Code	Model
62050006	6 Pieces
62050008	8 Pieces

» Pineapple Peeler

Code
41030005

Made in France

» French Fry Cutter

Code	Model
62050005	French Fry Cutter
62050808	8x8 Blade
62051010	10x0 Blade

» French Fry Cutter

Code	Dim. (mm)
41030003	9x9

Fruit and Vegetable Cutter

Made in France

Ergonomic

Large handles for ease and safety of use

Multi-Purpose

Easily interchangeable pusher, no tools required

Comfortable

Pusher return springs for easy use

Efficient

Tempered steel blades for clean, easy cutting. Cutting results guarantee impeccable product presentation and optimal conservation. Interchangeable blade block

Hardwearing

Robust composite body

Practical

Segments collection in a container to be placed directly under the appliance (GN 1/2 container max 100mm deep, not supplied)

Safe

Suction feet, high stability

Wedger

6 Pieces
8 Pieces

Slicer

5 mm

Semi-Circle Slicer

2 Slice / 5 mm

French Fries Cutter

8x8 mm
10x10 mm

French Fries Cutter

8x16 mm

Corer Segmenter

8 Pieces

- For fast, regular and calibrated wedging of tomatoes, lemons, oranges and potatoes
- Maximum diameter of fruit Ø 80 mm

» Vegetable/Fruit Wedger

Code	Model
77505610	Body
77505616	6 Pieces
77505618	8 Pieces

- For tomatoes, citrus fruit, kiwis. 5 mm slices
- Maximum diameter of fruit Ø 80 mm

» Vegetable Slicer

Code	Model
77505610	Body
77505611	5 mm Slice

- Specially designed to slice tomatoes for use in sandwiches
- With large tomatoes, half-slicer are often better suited and easier to use in sandwiches

» Semi-Circle Slicer

Code	Model
77505610	Body
77505629	5 mm Semi-circle Slice

- To easily core and slice fresh apples and pears into 8 segments
- Maximum diameter of fruit Ø 90 mm
- Core diameter Ø 25 mm

» Fruit Corer Segmenter

Code	Model
77505610	Body
77505619	8 Corer-segmentes

- With its perfectly sharp blades, it cuts potatoes into neat french fries without tears to avoid the absorption of oil during cooking
- Grid format 90 x 90 mm

» French Fries Cutter

Code	Model
77505610	Body
77505626	8x8 mm Segment
77505627	10x10 mm Segment

- Easily cut fresh potatoes into rectangles for "home-made" chips
- Chips are cut cleanly into 8 x 16mm rectangles with no tears

» Rectangular French Fries Cutter

Code	Model
77505610	Body
77505628	8x16 mm Segment

Made in France

Food Mill

Code	Dim. (cm)
62050037	37

* W/o sieve

Made in France

Sieve for Food Mill

Code	Hole Ø (mm)
62050001	1
62050015	1,5
62050002	2
62050003	3
62050004	4

Made in France

Food Mill w/3 Sieves

Code	Dim. (cm)
62050031	31

* Sieves: 1.5, 2.5 ve 4 mm
** w/ Sieves

Manuel Can Opener

Code	Model
41030004	Industrial
41130004	Aluminum
41230004	Strainless Steel

Bread Cutting Board w/Drawer

Code
49000006

Hamburger Press

Code	Model
41040010	Press w/10 cm
41040012	Chamber 12 cm
41040014	Chamber 14 cm

*w/10 cm chamber
**Other chambers not included

» Poultry Shears

Code

40010057

» Multi-Purpose Kitchen Scissors

Code

83010002

» Herb Scissors with 5 Blades

Code

83010003

» Apple Corer/Wedger (S/S)

Code

62040001

» Olive/Cherry Seed Remover (S/S)

Code

62040004

» Decorator (S/S)

Code

62050013

» Egg Slicer (S/S)

Code	Model
62040003	Egg Slicer
62040005	Egg Wedger

» Nut Cracker (S/S)

Code

62040006

» Garlic Press (S/S)

Code

62040007

» Tomato Corer
Code
83010004

» Oval Melon Baller
Code
83010005

» Ribbed Oval Melon Baller
Code
83010006

» Melon Baller

Code	Ø (mm)
83010010	10

» Melon Baller

Code	Ø (mm)
83010015	15

» Melon Baller

Code	Ø (mm)
83010022	22

» Melon Baller

Code	Ø (mm)
83010025	25

» Melon Baller

Code	Ø (mm)
83010030	30

» Pastry Wheel
Code
83010007

» Decorator
Code
40010042

» Triangular Decorator
Code
83010008

» "V" Shaped Decorator
Code
83010009

» Lemon Striper w/One Hole
Code
83010031

» Grapefruit Knife
Code
83010032

» Citrus Knife
Code
83010033

» Decorator
Code
40010033

» Butter Spreader
Code
83010034

» Butter Curler
Code
40010030

» Zucchini Corer
Code
83010035

» Apple Corer
Code
40010043

» Peeler
Code
40010029

» Cheese Slicer
Code
40010031

» Cheese Knife
Code
40010032

» Can Opener
Code
40010044

- 0+300°C : 10°C
- S/S Delici Çubuk :150 mm
- Ø : 50 mm

- +54 +88 °C / +130 +190 °F
- S/S Delici Çubuk :145 mm
- Ø : 50 mm

» Cooking & Frying Thermometer

Code

62060001

» Meat Thermometer

Code

62060006

- +50 +300 °C / +100 +600 °F
- S/S Body
- Ø : 83 mm
- Free standing w/hook
- Do not use in microwave oven

» Dial Oven Thermometer

Code

62060008

- -30 +30 °C / -20 +80 °F
- S/S Body
- Ø : 50 mm
- Free standing w/hook
- Do not use in oven and microwave oven

- -50+70°C / -58+158°F
- Cable : 1 m
- Magnetic back
- In/Out Temp.
- Max/Min Temp.
- Maxi-mini - Programmable alarm only stop ringing if it is turned off

- Timer 19 h - 59 m
- Stopwatch 19 h - 59 m
- Alarm
- Magnetic back / Free Standing

» Fridge/Freezer Thermometer

Code

62060007

» Digital Fridge Thermometer

Code

62060002

» Digital Timer

Code

62060009

- Control the temperature of your dish during cooking, while mixing at the same time
- Ideal for creams, caramelized sugar, chocolate
- Handle resists up to 220°C, dishwasher safe
- Removable thermometer -20° to +200°C, precision 0.1°C, reliability to 1°C
- Tight against water splashing, not suitable for dishwasher
- 385 mm length

» Spatula Thermometer

Code

77503090

- +80 +200°C
- Partial immersion 70 mm
- w/Cooking Areas
- +/- 350 mm length
- In glass-red liquid filled
- w/Stainless Steel protection sleeve

» Sugar Thermometer

Code

62060003

- -50+530°C / -58+986°F
- Distance Ratio: 12/1
- LCD Screen
- Data hold
- Calibration certificates

» Infrared Thermometer

Code

62060005

- -50+200°C / -58+392°F
- Waterproof
- S/S Piercing Probe :125 mm
- S/S Probe Ø 3,5 mm

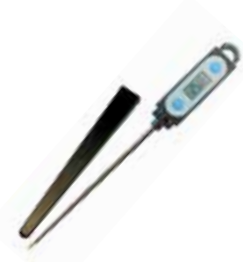

» Digital Pocket Thermometer

Code

62060004

» Digital Scale

Code	Capacity	Accuracy	Dim.(cm)
65010010	10 Kg	1 g	14,5x14,5
65010025	25 Kg	1 g	17,5x20

» Digital Scale w/Round Chamber

Code	Capacity	Accuracy	Ø (cm)
65010005	5 Kg	1 g	21

» Digital Scale

Code	Capacity	Accuracy	Dim.(cm)
65010015	15 Kg	0,5 g	18x21,5
65010030	30 Kg	1 g	18x21,5

» Digital Scale

Code	Capacity	Accuracy	Dim.(cm)
65010003	3 Kg	0,5-1 g	17,6x22,3

» Mechanical Scale

Code	Capacity	Accuracy
65010020	20 Kg	50 g

» Receiving Digital Scale

Code	Capacity	Dim.(cm)
65010150	150 Kg	40x50
65010300	300 Kg	60x70

» Calibrated Mixing Bowl

Code	Øxh (cm)
35050016	16x8
35050020	20x10
35050024	24x12
35050030	30x15
35050036	36x18

» Calibrated Conical Bowl

Code	Ø (cm)
62015020	20
62015024	24
62015028	28
62015032	32
62015036	36
62015040	40
62015045	45

» Calibrated Bucket (S/S)

Code	Lt
52020012	12

» Calibrated Bain-Marie Pot

Code	Øxh (cm)
35701416	14x16
35701618	16x18
35701820	18x20
35702022	20x22

» PC Measuring Cup

Code	Lt
60021001	1
60021002	2
60021003	3
60021005	5

» PP Measuring Cup

Code	Lt
43031001	0,5
43031002	1
43031003	2
43031004	3
43031006	5

» Measuring Cup

Code	Lt
62010001	1
62010002	2

» Measuring Cup Set

Code

40010058

*1/4 - 1/3 - 1/2 - 1/1 Cup

» Measuring Spoon Set

Code

40010059

*2,5 cc - 5 cc - 7,5 cc -15 cc

» Sauce Gun

Code
62010019

*Includes two interchangeable tips.

» Round Egg Ring

Code	Model	Dim. (cm)
62010039	Round	Ø 10
62010029	Square	10x10

» Speed Rail

Code	Dim. (cm)
56032322	56
56032332	81

» Grater

Code	Model
52020001	Horizontal
40010041	w/Handle

» Grater

Code	Model
44013300	Pyramid
44013301	Industrial

» Grater Set

Code
83010001

Tickets-holder

Code	Dim. (cm)
62010061	61

Chef's Tong

Code	Dim. (mm)	Model
77502913	145x10	Straight
77502021	200x25	Angular

Scoop (S/S)

Code	Capacity (gr)
44014301	98
44014302	136
44014303	252
44014304	382
44014305	560

PC Scoop

Code	Model
46010116	Plain
46010117	Perforated

Deco Spoon Set (2 Spoons)

Code	Ø (mm)	h (mm)
77506436	75	55

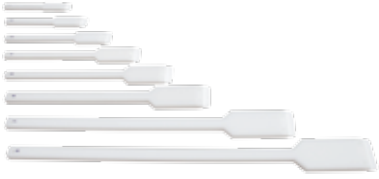

Mixing Spatula (S/S)

Code	Dim. (cm)
62010142	107

Potato Masher (S/S)

Code	Dim. (cm)
62010128	71

Spatula (Polyethylene)

Code	Dim. (cm)
49000030	30
49000035	35
49000045	45
49000055	55
49000065	65
49000075	75
49000100	100
49000120	120

» Mortar (Polyethylene)

Code	Model
49020002	Small
49020003	Medium
49020004	Big

» Honey Spoon (Polyethylene)

Code
49020010

» Fish Scale Cleaner (Polyethylene)

Code
49020020

» Sieve (S/S)

Code	Ø (cm)
44013025	25
44013030	30
44013040	40

» Grate (S/S)

Code	Ø (cm)
44013125	25
44013130	30
44013140	40

» Shaker

Code	Dim. (cm)	Model
62021789	7	Big Hole
62023789	7	Small Hole
62022789	7	Mesh

» Colander

Code	Øxh (cm)
30423609	36x9
30423812	38x12
30424512	45x12
30425012	50x12
30426012	60x14
30427014	70x14
30428016	80x16

» Colander for Sauce Pan

Code	Øxh (cm)
31380005	20x13
31380006	24x15
31380020	28x17

» Colander

Code	Ø (cm)
62010028	28
62010032	32
62010036	36
62010040	40

Chinese Colander

Code	Ø (cm)
62010016	16
62010020	20
62010024	24

Exoglass Bouillon Strainer

Code	Øxh (cm)
77507360	20x22

S/S Bouillon Strainer

Code	Øxh (cm)
62011290	22x23

Conical Strainer

Code	Ø (cm)
62013016	16
62014020	20

1/4-Segment Pasta Colander

Code	Dim. (cm)
36302420	Suitable for 24x19,5 Pot
36303623	Suitable for 36x22 Pot
36304026	Suitable for 40x25 Pot

Funnel w/Strainer

Code	Ø (cm)
62010475	12
62010550	14

» Round Strainer (S/S)

Code	Dim. (cm)
44013424	24
44013427	27
44013430	30

» Coarse Round Strainer (S/S)

Code	Dim. (cm)
44013324	24
44013327	27
44013330	30

» Round Strainer (S/S)

Code	Dim. (cm)
62010018	18
62010022	22
62010026	26

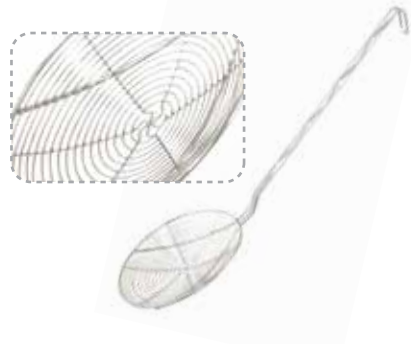

» Mesh Skimmer (S/S)

Code	Dim. (cm)
44013217	17
44013222	22
44013227	27
44013230	30

» Coarse Mesh Skimmer (S/S)

Code	Dim. (cm)
44013817	17
44013822	22
44013827	27
44013830	30

» Wire Skimmer S/S (Heavy Duty)

Code	Dim. (cm)
62016020	20
62016024	24
62016028	28

» Strainer for Pot (S/S)

Code	Dim. (cm)
44013015	30x15
44014020	40x20
44015020	50x20
44016020	60x20
44017030	70x30
44018030	80x30

» Strainer for Pan (S/S)

Code	Dim. (cm)
44014011	40x11
44015012	50x12
44016014	60x14
44017015	70x15
44018016	80x16

» Wire Whip (S/S)

Code	Dim. (cm)
40010061	25
40010062	30
40010063	35
40010064	40
40010065	45
40010066	50
40010067	55
40010068	60

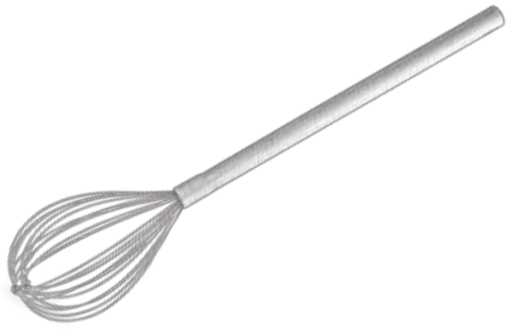

» Balloon Whisk (Chrome Plated)

Code	Dim. (cm)
44010274	74
44010298	98
44012120	120

» Whisk

Code	Dim. (cm)
62020031	31
62020036	36
62020041	41
62020046	46
62020051	51

» Egg Whisk

Code	Dim. (cm)
40010071	10
40010072	20

» Whisk (S/S)

Code	Dim. (cm)
40010069	25
40010070	35

Spatulas

» Exoglass Heat -Resistant Spatula

Code	Dim. (cm)
77502430	30

» Exoglass Heat -Resistant Spatula

Code	Dim. (cm)
77503025	25
77503030	30
77503035	35
77503040	40
77503045	45
77503050	50

» Heat -Resistant Spatula

Code	Dim. (cm)
62012500	25
62013500	35
62014500	40

» Pastry Spatula

Code	Dim. (cm)
62013025	25
62013030	30
62013035	35

» Angular Spatula

Code	Dim. (cm)
62010025	25

» Spatula

Code	Dim. (cm)
62010010	10
62010013	13
62010015	15

» Wide Spatula

Code	Dim. (cm)
62012020	20
62011025	25

» Perforated Wide Spatula

Code	Dim. (cm)
62012025	25

» Pizza Spatula

Code	Dim. (cm)	Model
62010008	17	Normal
62010014	17	Perforated

» Spatula (S/S Handle)

Code	Dim. (cm)
44020001	6,5x11
44020002	8x12
44020003	10x13,5
44020004	11x16
44020005	13x17

» Serving Spatula (S/S)

Code	Dim. (cm)
62010011	25

» Serving Spatula (S/S)

Code	Dim. (cm)
62010012	24

» Pastry Spatula (S/S Handle)

Code	Dim. (cm)
44020101	20x3,5
44020102	25x3,5
44020103	30x3,5

» Pastry Knife (S/S Handle)

Code	Dim. (cm)
44020201	20x3,5
44020202	25x3,5
44020203	30x3,5

» Pastry Knife (S/S Handle)

Code	Dim. (cm)
44020301	20x3,5
44020302	25x3,5
44020303	30x3,4

» Pizza Spatula (S/S Handle)

Code	Dim. (cm)
44020006	16x4x13,5

» Pizza Roulette

Code	Ø (cm)
62010021	10

» Dough Scraper (S/S Handle)

Code	Dim. (cm)
62010006	13x11

490 491 492 493 494 495

» Cutting Boards

Code	Dim. (cm)
49050404	25x40x4
49030404	30x40x4
49030504	30x50x4
49030604	40x60x4
49025402	25x40x2
49030402	30x40x2
49030502	30x50x2
49063202	32,5x26,5x2
49025302	32,5x53x2
49060402	60x40x2

» Cutting Board for GN Pan

Code	Model
49020030	Cutting Board for GN 1/1 Pan

* w/o G/N Pan.

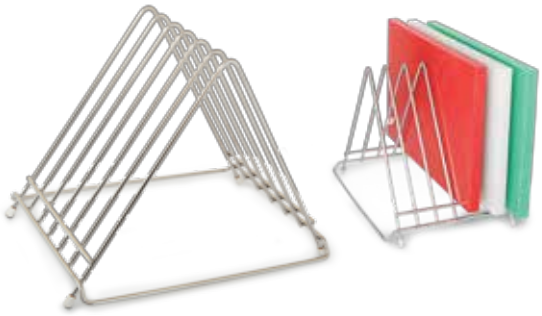

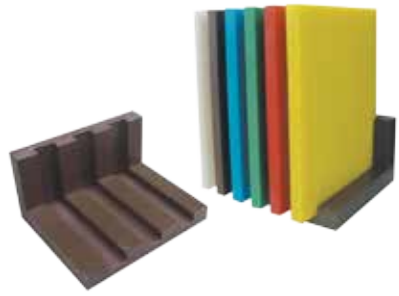

» Cutting Board RackS/S (6 Partitioned)

Code	Dim. (cm)
62021885	30,5x26,5x26,5

* Suitable for 2mm cutting board

» Storing Shelf for Cutting Board

Code	Model
49000002	For 2 cm Thickness
49000004	For 4 cm Thickness

» Board Scraper (Polyethylene)

Code
49000003

GIESSER MESSER *Made in Germany*

FORGED CHEF'S KNIVES

THE HANDLE
For the forged cook's knives only high grade POM plastic scales are used

THE REFINEMENT
In eight steps the knife is smoothed to perfection. The honing by the hand of a master craftsman guarantees a perfect blade

THE FORGING
From high grade chrome-molybdenum steel (X50 CRMO 14) the forged blank blade is manufatured in mine procedures

» Forged Chef's Knife

Code	Dim. (cm)
60501800	18
60502000	20
60502500	25
60503000	30

» Forged Slicer Knife

Code	Dim. (cm)
60501510	15
60502010	20
60502510	25

» Forged Steak Knife

Code	Dim. (cm)
60501200	12

» Forged Paring Knife

Code	Dim. (cm)
60501000	10

» Forged Boning Knife

Code	Dim. (cm)
60501300	13
60501600	16

» Forged Bread Knife

Code	Dim. (cm)
60501610	20

» Forged Filleting Knife

Code	Dim. (cm)
60501810	18

» Forged Salmon Knife

Code	Dim. (cm)
60503100	31

GIESSER MESSER *Made in Germany*

Riveted Chef's Knives

ERGONOMICS
The double-or triple- rivetted outer or solid material handle provides a safe grip when working in a professional kitchen

POM
Polyoxymethylene is a dimensionally stable and rigid plastic that naturally meets the requirements of the Federal Food and Commodities Regulation

» Chef's Knife

Code	Dim. (cm)
60512000	20
60512600	26

» Paring Knife

Code	Dim. (cm)
60518500	8,5

» Multi Purpose Knife

Code	Dim. (cm)
60511500	15

» Bread Knife

Code	Dim. (cm)
60512400	24

» Boning Knife

Code	Dim. (cm)
60511510	13

» Butcher Knife

Code	Dim. (cm)
60512100	21

» Ham Knife

Code	Dim. (cm)
60512500	25

Chef's Knife

Code	Dim. (cm)
60521600	16
60522000	20
60522300	23
60522600	26
60523100	31

605 615 625 635 645

Butcher Knife

Code	Dim. (cm)
60521800	18
60522100	21
60522400	24
60522700	27
60523000	30

605 635 645

Boning Knife

Code	Dim. (cm)
60521400	14
60521610	16

605 625 635 645

Bread Knife Wavy Edge

Code	Dim. (cm)
60521210	21

605 635

Bread Knife Wavy Edge Angular

Code	Dim. (cm)
60521230	23

Multi Purpose Knife

Code	Dim. (cm)
60522130	13
60522160	16
60522180	18
60522210	21

605 615 625 635 645

Fish Knife

Code	Dim. (cm)
60522181	18
60523210	21

605 625

Salmon Knife

Code	Dim. (cm)
60524210	21

605 625

Knife Bag

Code	Model
60500001	7 Segments

* w/o knives

Cook's Knife Monoblock

Code	Dim. (cm)
44020029	29
44020031	31
44020033	33
44020035	35

Ham Knife Monoblock

Code	Dim. (cm)
44020042	42
44020047	47

Pastry & Pie Knife

Code	Dim. (cm)
44020022	22
44020023	23
44020024	24

Onion Knife

Code	Dim. (cm)
44021031	31

» Chrome Cook's Knife

Code	Dim. (cm)
45000026	17
45000027	19
45000028	21

» Paring Knife

Code	Dim. (cm)
45091041	9
45091042	12
45091043	13

» Butcher Knife

Code	Dim. (cm)
45091000	12,5
45091001	14,5
45091002	16,5
45091003	19
45091004	21
45091008	25

» Bread Knife

Code	Dim. (cm)
45091052	15,5
45091053	17,5

» Boning Knife

Code	Dim. (cm)
45091005	12,5
45091006	14,5
45091007	16,5

» Chopping Knife

Code	Dim. (cm)
45000001	14
45000002	16
45000003	18
45000004	20

» Fish Filleting Knife

Code	Dim. (cm)
45091091	25

» Ham Knife

Code	Dim. (cm)
45000007	30

» Bread Knife

Code	Dim. (cm)
45041023	19,5

Cook's Knife

Code	Dim. (cm)
45091160	19
45091161	21
45091162	23

Cheese Knife

Code	Dim. (cm)
45091070	13,5
45091071	15,5
45091072	17,5

Doner Kebab Knife

Code	Dim. (cm)
45071004	55

Pastry Knife

Code	Dim. (cm)
45091171	16

Heavy Cream Knife

Code	Dim. (cm)
45091172	19

Pastry & Pie Knife

Code	Dim. (cm)
45071080	16,5
45071081	18
45071082	20

Fisher Knife

Code	Dim. (cm)
45091151	35

Ham Knife

Code	Dim. (cm)
45000005	35

Ham Knife (Double Handled)

Code	Dim. (cm)
45000006	30

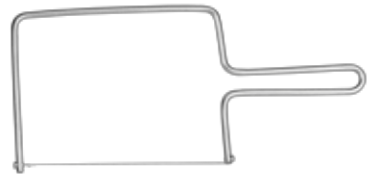

» Pizza Knife

Code	Dim. (cm)
45071120	26

» Decoration Knife Set

Code
45041330

» Cheese Slicer

Code	Dim. (cm)
62050017	17

» Sharpening Steel (Round)

Code	Dim. (inch)
45081083	12

» Sharpening Steel

Code	Dim. (inch)
45081088	12

» Filleting Knife

Code	Dim. (cm)
45000030	30
45000035	35

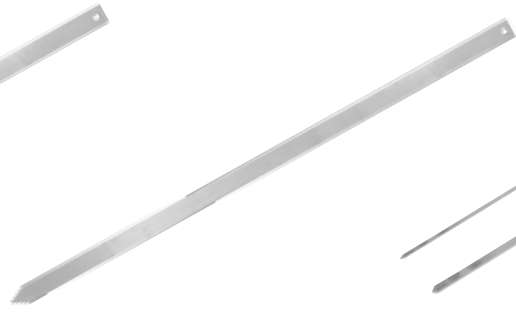

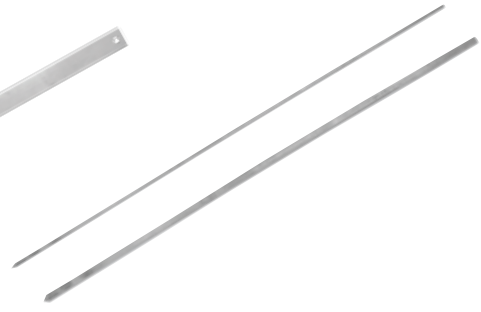

» Skewer (S/S)

Code	Dim. (cm)
45081152	60

» Skewer (Galvanized)

Code	Dim. (cm)
45081153	60

» Skewer Square (S/S)

Code	Dim. (cm)
45081167	3x3 mm 60 cm
45081166	5x5 mm 60 cm

Cleaver

Code	Dim. (cm)
45061111	20
45061112	23

Cleaver w/Long Handle

Code	Dim. (cm)	No
45000009	20	1
45000010	24	2
45000011	29	3

Poultry Cleaver

Code	Dim. (cm)
45000008	19

Onion Knife

Code	Dim. (cm)
45061060	19

Black Hammered Mincing Knife

Code	Dim. (cm)
45000012	30
45000013	35
45000014	40
45000015	45
45000016	50
45000017	55

Mincing Knife (S/S)

Code	Dim. (cm)
45000018	30
45000019	35
45000020	40
45000021	45
45000022	50
45000023	55

Meat Tenderiser (Polyethylene)

Code	Dim. (cm)
49000005	40

Meat Tenderiser (S/S)

Code
62010017

Meat Tenderiser

Code
45000036

» Mincing Knife w/Double Handles

Code	Dim. (cm)
45000024	25
45000025	30

» Meat Hook

Code	Dim. (cm)
62020010	10
62020015	15
62020025	25

» Meat Hook

Code	Dim. (cm)	Model
45081040	8	Nickel
45081056	8	Chrome

» S/S Chainmail Butcher Glove

Code
65600010

* Reverse side can be wearable

** Sizes available

» S/S Chainmail Shoulder Butcher Glove

Code
65600012

» Cut Resistant Glove

Code
65600011

» S/S Chainmail Butcher Apron

Code	Dim. (cm)
65605660	56x60<1,65 m
65605670	56x70>1,65 m

» Magnetic Board

Code	Dim. (cm)
45081205	50

» Knife Sterilizer

Code	Model
45000037	20 Division

Pastry

» Springform Mould

Code	Ø (cm)
64010240	24
64010260	26
64010280	28

» Springform Mould 2 Bottoms

Code	Ø (cm)
64012400	24
64012800	28

» Round Tart Mould w/Flat Edge (Flutted)

Code	Ø (mm)	h (mm)
64012421	240/210	30
64012623	260/230	30
64012825	280/250	30
64013229	320/290	30

» Round Flutted Mould (Loose Bottom,Narrow Ribs)

Code	Ø (mm)	h (mm)
64011080	100/80	30
64011513	150/130	40
64012017	200/170	45
64012521	250/210	50

» Medium Deep Flutted Mould (Loose Bottom)

Code	Ø (mm)	h (mm)
64012018	200/185	25
64012423	240/230	25
64012827	280/270	25

» Round Plain Mould

Code	Ø (mm)	h (mm)
64012120	200/175	50
64012124	240/210	50
64012528	280/250	50
64013295	320/295	55

Square Tartlet Mould (Fluted-Loose Bottom)

Code	Dim. (mm)	h (mm)
64011010	100x100	20

Rectangle Tartlet Mould (Fluted-Loose Bottom)

Code	Dim. (mm)	h (mm)
64011275	120x75	20

Rectangular Tart Mould (Fluted-Loose Bottom)

Code	Dim. (mm)	h (mm)
64113511	350x110	25

Flutted Oval Boat Mould

Code	Dim. (mm)	Pcs/Ctn
64018040	80x40	12
64011045	100x45	12
64011250	120x50	12

Plain Oval Boat Mould

Code	Dim. (mm)	Pcs/Ctn
64016020	60x20	12
64018033	80x33	12
64011043	100x43	12
64011350	120x50	12

Brioche Mould

Code	Dim. (mm)	Pcs/Ctn
64016028	60x28	12
64018140	80x40	12
64011055	100x55	12
64011155	110x55	12

Dariole/Rum Baba Mould

Code	Ø (mm)	Pcs/Ctn
64010060	60	12

Souffle Mould

Code	Ø (mm)	Pcs/Ctn
64010080	80	3

Fluted Round Canele

Code	Ø (mm)	h (mm)
64310045	45	10
64310060	60	10
64310080	80	12
64310100	100	18
64310120	120	20

» Ribbed Dome Mini Mould

Code	Dim. (mm)
64010045	45

» Ribbed Oval Mini Mould

Code	Dim. (mm)
64110045	45

» Ribbed Square Mini Mould

Code	Dim. (mm)
64210045	35x35

» Deep Plain Round Mini Mould

Code	Ø (mm)
64010035	35

» Plain Round Mini Mould

Code	Ø (mm)
64110035	35

» Friand Mould

Code	Dim. (mm)	h (mm)
64210035	98x51	14

» Baking Sheet

Code	Dim. (mm)	h (mm)
64014035	400x300	35
64014050	400x300	50

» Toastbrot w/Lid

Code	Dim. (mm)
64012500	250x76
64010400	400x90

» Dome

Code	Dim. (mm)	Capacity (ml)
43030096	81x41	24x125 ml

* Mould Dimensions 40x60 cm

» Dome Mini

Code	Dim. (mm)	Capacity (ml)
43030097	50x28	40x20 ml

* Mould Dimensions 40x60 cm

» Ribbed Dome

Code	Dim. (mm)	Capacity (ml)
43030082	85x50	12x150 ml

* Mould Dimensions 40x60 cm

» Muffin Big

Code	Øxh (mm)	Capacity (ml)
43030057	73x40	24x125 ml

* Mould Dimensions 40x60 cm

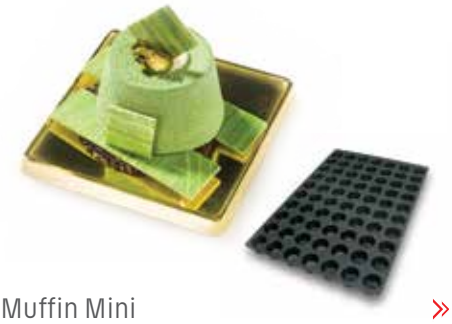

» Muffin Mini

Code	Øxh (mm)	Capacity (ml)
43030055	51x29	40x45 ml

* Mould Dimensions 40x60 cm

» Muffin

Code	Øxh (mm)	Capacity (ml)
43030067	40x20	48x25 ml

* Mould Dimensions 40x60 cm

» Oval Mini

Code	Øxh (mm)	Capacity (ml)
43030068	52x32x20	50x25 ml

* Mould Dimensions 40x60 cm

» Fiorentin Disk

Code	Øxh (mm)	Capacity (ml)
43030053	60x12	35x33,5

* Mould Dimensions 40x60 cm

» Ringed Cylinder

Code	Øxh (mm)	Capacity (ml)
43030098	80x55	12x

* Mould Dimensions 40x60 cm

» Square Mini

Code	Øxh (mm)	Capacity (ml)
43030054	86x46x25	25x110

* Mould Dimensions 40x60 cm

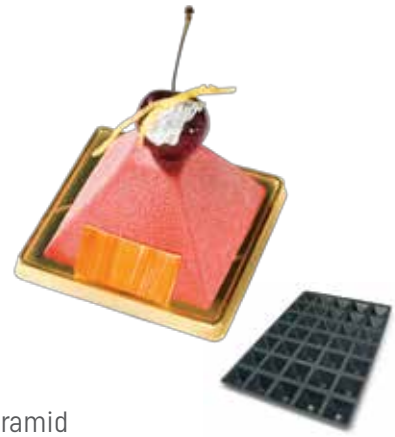

» Pyramid

Code	Øxh (mm)	Capacity (ml)
43030058	65x35	35x61

* Mould Dimensions 40x60 cm

» Pyramid Single Cake

Code	Øxh (mm)	Capacity (ml)
43030099	80x80x70	12x130 mlt

* Mould Dimensions 40x60 cm

» Madlen Mini

Code	Øxh (mm)	Capacity (ml)
43030061	45x26	100x12

* Mould Dimensions 40x60 cm

» Pandorino

Code	Øxh (mm)	Capacity (ml)
43030065	76,5x74	30x188

* Mould Dimensions 40x60 cm

» Mekik

Code	Øxh (mm)	Capacity (ml)
43030066	107x45x15	30x35 ml

* Mould Dimensions 40x60 cm

» Souffle

Code	Øxh (mm)	Capacity (ml)
43030080	44x28	40x28 ml

* Mould Dimensions 40x60

» Elips Sticks

Code	Øxh (mm)	Capacity (ml)
43030189	495x40	5x450 ml

* Mould Dimensions 28x38 cm

» Sticks Tek Pasta

Code	Øxh (mm)	Capacity (ml)
43030079	370x46x43	4x350 ml

* Mould Dimensions 28x38 cm

» Volcano Petits Fours

Code	Øxh (mm)	Capacity (ml)
43030081	35x24	60x17 ml

* Mould Dimensions 40x60 cm

» Square Petits Fours

Code	Øxh (mm)	Capacity (ml)
43030085	35x35x16	60x17 ml

* Mould Dimensions 40x60 cm

» Sphere

Code	Øxh (mm)	Capacity (ml)
43030084	73x42	18x130 ml

* Mould Dimensions 40x60 cm

» Heart

Code	Øxh (mm)	Capacity (ml)
43030094	82x90x50	20x130 ml

* Mould Dimensions 40x60 cm

» Apple

Code	Øxh (mm)	Capacity (ml)
43030083	79x69	12x140 ml

* Mould Dimensions 40x60 cm

» Rose

Code	Øxh (mm)	Capacity (ml)
43030086	80x55	12x130 ml

* Mould Dimensions 40x60 cm

» Double Heart

Code	Øxh (mm)	Capacity (ml)
43030087	85x90x49	12x130 ml

* Mould Dimensions 40x60 cm

» Paradise

Code	Øxh (mm)	Capacity (ml)
43030090	85x55	12x135 ml

* Mould Dimensions 40x60 cm

» Volcanic

Code	Øxh (mm)	Capacity (ml)
43030095	90x70	12x120 ml

* Mould Dimensions 40x60 cm

» Half Sphere 5 Pcs.

Code	Øxh (mm)	Capacity
43030012	80x40	5x120 ml

» Half Sphere 6 Pcs.

Code	Øxh (mm)	Capacity
43030013	70x35	6x80 ml

» Half Sphere 6 Pcs.

Code	Øxh (mm)	Capacity
43030014	60x30	6x60 ml

» Half Sphere 8 Pcs.

Code	Øxh (mm)	Capacity
43030015	50x25	8x30 ml

» Half Sphere 15 Pcs.

Code	Øxh (mm)	Capacity
43030016	40x20	15x20 ml

» Half Sphere 24 Pcs.

Code	Øxh (mm)	Capacity
43030017	30x15	24x10 ml

» Pyramid 6 Pcs.

Code	Øxh (mm)	Capacity
43030018	71x71	6x90 ml

» Tartalette 15 Pcs.

Code	Øxh (mm)	Capacity
43030019	50x15	15x25 ml

» Oval 16 Pcs.

Code	Øxh (mm)	Capacity
43030020	55x33x20	16x30 ml

» Mini Muffin 11 Pcs.

Code	Øxh (mm)	Capacity
43030021	51x28	11x50 ml

» Medium Muffin 6 Pcs.

Code	Øxh (mm)	Capacity
43030022	69x35	6x100 ml

» Big Muffin 6 Pcs.

Code	Øxh (mm)	Capacity
43030023	68x38	6x119 ml

» Big Heart 6 Pcs.

Code	Øxh (mm)	Capacity
43030027	65x40	6x130 ml

» Medium Boat 12 Pcs.

Code	Øxh (mm)	Capacity
43030028	72x30	12x20 ml

» Big Boat 9 Pcs.

Code	Øxh (mm)	Capacity
43030029	100x44	9x40 ml

» Petit Four 15 Pcs.

Code	Øxh (mm)	Capacity
43030025	40x20	15x30 ml

» Brioche 6 Pcs.

Code	Øxh (mm)	Capacity
43030026	79x37	6x110 ml

» Medium Heart 8 Pcs.

Code	Øxh (mm)	Capacity
43030071	60x35	8x90 ml

» Vertigo 6 Pcs.

Code	Øxh (mm)	Capacity
43030033	77x37	6x110 ml

» Tartalette 8 Pcs.

Code	Øxh (mm)	Capacity
43030031	60x17	8x42 ml

» Small Heart 10 Pcs.

Code	Øxh (mm)	Capacity
43030032	48x54	10x45 ml

» Small Nut 15 Pcs.

Code	Øxh (mm)	Capacity
43030036	41x30	15x21 ml

» Mini Rose 15 Pcs.

Code	Øxh (mm)	Capacity
43020034	44x27	15x23 ml

» Rose 15 Pcs.

Code	Øxh (mm)	Capacity
43030035	44x27	15x23 ml

» Big Nut 8 Pcs.

Code	Øxh (mm)	Capacity
43030037	76x48	8x44 ml

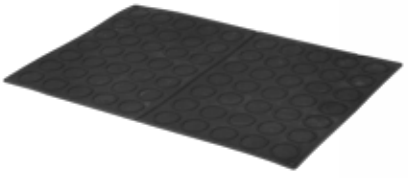

» Macaron Baking Sheet

Code	Dim. (cm)	Capacity
43035000	40x60	70 partition

» Baking Sheet

Code	Dim. (cm)
43030069	40x60

» Spoon Chocolate Mould

Code	Dim. (mm)	Capacity
43032001	275x135	10x10 gr

» Square Chocolate Mould

Code	Dim. (mm)	Capacity
43032002	275x135	10x20 gr

» Rib Oval Chocolate Mould

Code	Dim. (mm)	Capacity
43032003	275x135	24x15 gr

» Diamonds Chocolate Mould

Code	Dim. (mm)	Capacity
43032004	275x135	21x14 gr

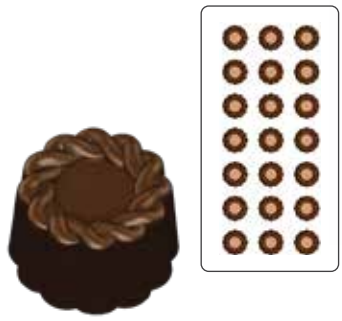

» Wreath Chocolate Mould

Code	Dim. (mm)	Capacity
43032005	275x135	21x10 gr

» Roses Chocolate Mould

Code	Dim. (mm)	Capacity
43032006	275x135	24x8 gr

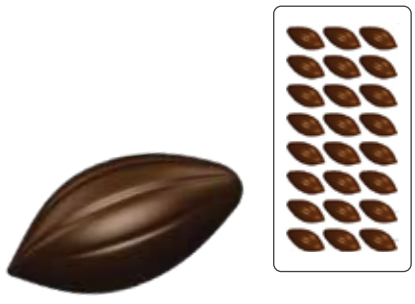

» Cacao Chocolate Mould

Code	Dim. (mm)	Capacity
43032007	275x135	24x10 gr

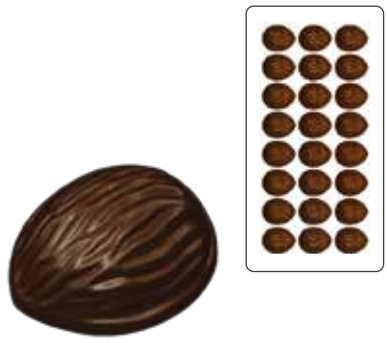

» Walnut Chocolate Mould

Code	Dim. (mm)	Capacity
43032008	275x135	24x8 gr

» Heart Chocolate Mould

Code	Dim. (mm)	Capacity
43032009	275x135	24x13 gr

» Big Scallop Chocolate Mould

Code	Dim. (mm)	Capacity
43032010	275x135	21x13 gr

» Small Scallop Chocolate Mould

Code	Dim. (mm)	Capacity
43032012	275x135	24x13 gr

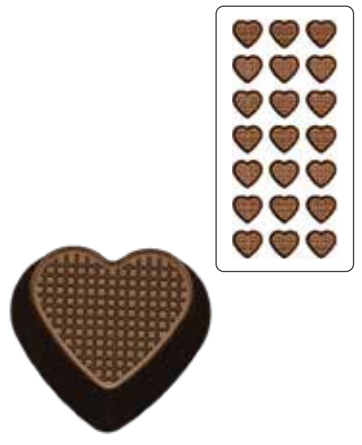

» Patterned Heart Chocolate Mould

Code	Dim. (mm)	Capacity
43032011	275x135	21x11 gr

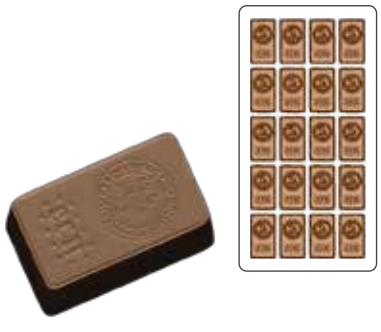

» Gold Ingot Chocolate Mould

Code	Dim. (mm)	Capacity
43032013	275x135	20x17 gr

» Crown Chocolate Mould

Code	Dim. (mm)	Capacity
43032014	275x135	24x14 gr

» Butterfly Chocolate Mould

Code	Dim. (mm)	Capacity
43032015	275x135	21x10 gr

» Ribbed Elips Chocolate Mould

Code	Dim. (mm)	Capacity
43032016	275x135	24x13 gr

» Cubic Chocolate Mould

Code	Dim. (mm)	Capacity
43032017	275x135	24x12,5 gr

» Madlen Chocolate Mould

Code	Dim. (mm)	Model
43032019	43x43x6 gr	Round
43032020	40x40x 6 gr	Square

Cake Rings h:5 cm

Code	Ø (cm)
43030508	8
43030510	10
43030514	14
43030516	16
43030518	18
43030520	20
43030522	22
43030524	24
43030526	26
43030528	28

Cake Rings h:7 cm

Code	Ø (cm)
43030708	8
43030710	10
43030714	14
43030716	16
43030718	18
43030720	20
43030722	22
43030724	24
43030726	26
43030728	28

Adjustable Ring

Code	Dim. (cm)	h (cm)
43030010	15-30	8,5

Square Ring h:7 cm

Code	Dim. (cm)
43031710	10x10
43031713	13x13
43031715	15x15
43031717	17x17
43031719	19x19
43031722	22x22
43031724	24x24
43031726	26x26
43031728	28x28
43031730	30x30

Square Ring h:10 cm

Code	Dim. (cm)
43031010	10x10
43031013	13x13
43031015	15x15
43031017	17x17
43031019	19x19
43031022	22x22
43031024	24x24
43031026	26x26
43031028	28x28
43031030	30x30

Adjustable Cake Mould

Code	Dim. (cm)	h (cm)
43030007	20-40	5
43030006	30-60	5
43030009	20-40	7
43030008	30-60	7

» S/S Tart Ring Rolled Edges

Code	Øxh (cm)	Pcs/Ctn
77507016	70x16	6
77508016	80x16	6
77509016	90x16	6
77501020	100x20	6

» S/S Tart Ring Rolled Edges

Code	Øxh (cm)
77501220	120x20
77501420	140x20
77501620	160x20
77501820	180x20
77502020	200x20
77502220	220x20
77502420	240x20
77502620	260x20
77502820	280x20
77503020	300x20
77503220	320x20

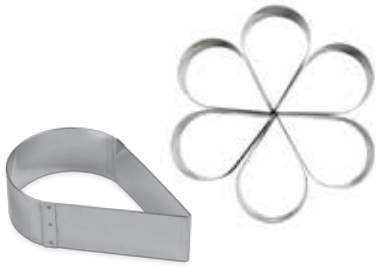

» Waterdrop

Code	Dim. (mm)	h (mm)
64019060	90x60	30
64012817	280x175	45

» Convex Heart

Code	Dim. (mm)	h (mm)
64018585	85x85	30

» Concave Square

Code	Dim. (mm)	h (mm)
64016060	60x60	30

» Oblong

Code	Dim. (mm)	h (mm)
64011140	110x40	30

» Teardrop

Code	Dim. (mm)	h (mm)
64019050	90x50	30

» Adjustable Heart Mould

Code	h (cm)	Pcs/Ctn
43030011	7	12

» Round FLutted Cutter

Code	Dim. (mm)
43032000	35-95

» Round Plain Cutter

Code	Dim. (mm)
43132000	35-95

» Dough Wheel Multi Cut

Code	Model
43030049	5 Wheels
43030050	7 Wheels

» Pastry Roller

Code

77501110

» Spiked Pastry Roller

Code

77501120

» Oven Mitt

Code	Dim. (cm)
43130005	Short
43130006	Long

» Leather Glove (Over Wrist)

Code

43030005

» Silicone Glove (Over Wrist)

Code

43030004

Induction Cooker

- Especially for pastry
- AISI 304 Stainless Steel body
- Vitroceramic top glass cooking surface
- Glass touches control panel
- Amper : 7 A
- On/Off, manual power setting (+/-) and timer control with 2 digits display (works for both timer and power
- 230 V; AC 50-60 Hz
- 1500 W
- 20 level
- Coil : Ø 180 mm
- Complies with European standards for safety of electrical appliances, for EMC and for Rohs

» PAstry Induction Cooker

Code	Dim. (mm)	Weight
47100001	365x461x77	4,4 Kg

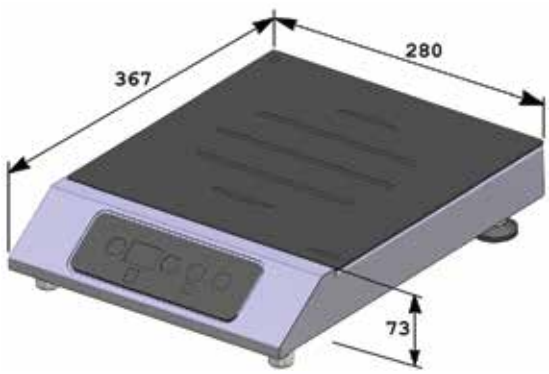

Setting	Power Watts	Setting	Power Watts
1	25	11	450
2	50	12	500
3	75	13	600
4	100	14	700
5	150	15	800
6	200	16	900
7	250	17	1000
8	300	18	1100
9	350	19	1300
10	400	20	1500

- Multi-Purpose appliance for melting and keeping chocolate, fondant, toppings, sauces, jelly, etc.
- Non detachable stainless steel bowl
- Heat is uniformly distributed thanks to a special resistor
- Electronic regulation 25 to 90°c for a wide range of uses. Accuracy ± 1,5°C
- Reduced energy consumption thanks to ef cient insulation
- Weight: 1.8 kg

» Chocolate Melting Machine

Code	Øxh (mm)	Capacity
77550010	254x188	3,5 Lt

- Stainless Steel body and inner chamber
- warming tank has been designed specifically to heat and maintain chocolate at a temperature range of 20°C - 60°C / 68°F - 140°F
- Depending upon the required temperatures, it can potentially be used for similar materials such as icing, glaze, butter and the like
- warming tank provides a much faster, more accurate and more energy efficient solution for heating chocolate at a temperature range of 20°C - 60°C
- The system works with direct and air based induction heating, applied from below as well as each of the four sides
- This innovative heat distribution approach warms the chocolate much faster and more efficiently than the industry 'below only' induction heating plate standard - which take many hours longer to melt the chocolate
- Small, lightweight modern design with easy carry handles

» Chocolate Melting Machine

Code	Dim. (cm)	Capacity
43031014	40x18x25	6 Kg

Pastry : Macaroon, butter cream, custard, Chantilly cream, mousse, meringue, marshmallow, oating island, royal icing, etc.
Cooking : Mayonnaise, compound butter, pommes duchesse, mashed potatoes, ne stuf ng, etc.

- Easy to use with a traditional pastry bag
- Decorating tubes offer a myriad of combinations of colours and avours, to suit the inspiration of confectioners and cooks
- The system used ensures exceptional results in effect and colour shades
- The different types of tubes available (star, plain, Yule log tube, etc.) expand the possibilities to create original decorations

» Duo Kit with Coating System

Code
77508004

» Pastry Bag

Code	Dim. (cm)
43030038	40
43030039	46
43030040	50
43030041	55
43030042	60
43030043	65

» Pastry Bag 100 Pcs.

Code	Model	Dim. (cm)
43030044	72'li	55

» Icing Tip Set 12 Pcs. (PC)

Code
43030073

» Icing Tip Set 12 Pcs. (PC)

Code
43030072

» Icing Tip Set 26 Pcs. (S/S)

Code
43031007

» Icing Tip Set 52 Pcs. (S/S)

Code
43031008

» Hot Chocolate Spray Gun

Code	Model
43031000	Heated

» Chocolate Spray Gun

Code
43031050

» Cream Whipper

Code	Capacity
43030045	0,5 Lt
43030046	1,0 Lt
43030047	10x8 gr Cream Charger

» Torch

Code
43030048

» Sauce Gun

Code
62010019

* Ihcludes 2 interchangeable tips

» Shaker

Code	Dim.(cm)	Model
62021789	7	Big Hole
62023789	7	Small Hole
62022789	7	Mesh

- Control the temperature of your dish during cooking, while mixing at the same time
- Ideal for creams, caramelized sugar, chocolate
- Handle resists up to 220°C, dishwasher safe
- Removable thermometer -20° to +200°C, precision 0.1°C, reliability to 1°C
- Tight against water splashing, not suitable for dishwasher
- 385 mm length

- +80 +200°C
- Partial immersion 70 mm
- w/Cooking Areas
- +/- 350 mm length
- In glass-red liquid filled
- w/Stainless Steel protection sleeve

Spatula Thermometer

Code	Dim. (cm)
77503090	38,5

Sugar Thermometer

Code
62060003

Rolling Pin (Polyethylene)

Code	Dim. (cm)
49020025	Ø 25
49010035	Ø 35

Roller (Polyethylene)

Code	Dim. (cm)	Model
49070250	Ø 7x25+20	Small
49080330	Ø 8x33+20	Medium
49098380	Ø 9x38+20	Big

Roller (S/S)

Code	Dim. (cm)
44020007	50

Genoese Saw

Code	Model
43031052	Set of 2 spared blades

Chocolate Spatula

Code	Dim. (cm)
43031051	20

Brush

Code	No
43600001	Small
43600002	Medium
43600003	Large

» Pouring Container

Code	Lt
60020001	1
60020002	2

» BO

Code	ml
43030075	500
43030076	1000

» Flacone

Code	ml
43030077	500
43030078	1000

» Calibrated Bain-Marie Pot

Code	Øxh (cm)
35701416	14x16
35701618	16x18
35701820	18x20
35702022	20x22

» PC Measuring Cup

Code	Lt
60021001	1
60021002	2
60021003	3
60021005	5

» PP Measuring Cup

Code	Lt
43031001	0,5
43031002	1
43031003	2
43031004	3
43031006	5

» Measuring Cup

Code	Lt
62010001	1
62010002	2

» Measuring Cup Set

Code

40010058

*1/4 - 1/3 - 1/2 - 1/1 Cup

» Measuring Spoon Set

Code

40010059

*2,5 cc - 5 cc - 7,5 cc -15 cc

» Cake Stand

Code	Øxh (cm)
32502205	22x5
32502405	24x5
32503005	30x5
32503605	36x5
32502210	22x10
32502410	24x10
32503010	30x10
32503610	36x10

» Revolving Cake Stand S/S

Code	Ø (cm)
43031005	33

» Revolving Cake Stand

Code	Ø (cm)
43030074	33

» Cake Stand

Code	Dim. (cm)	Model
80010005	30,5x30,5x11,5	Round
80010007	39x16,5x12,5	Rectangular

» Unbreakable Tray

Code	Dim. (cm)	Pcs/Ctn
43030030	10x30	100
43031530	15x30	50
43032030	20x30	50
43032540	25x40	50

430	431	432	433
Transparent	White	Black	Red

» Aliminum Confectionary Trays

Code	Dim. (cm)
43013040	30x40x4
43013345	33x45x4
43013545	35x45x4
43013547	35x47x4
43013851	38x51x4
43014050	40x50x4
43014060	40x60x4
43014061	40x60x1,5
43014062	40x60x2
43013480	34x80x2
43013484	34x84x2
43013488	34x88x2
43013080	30x80x5
43023488	34x88x5

- For fast, regular wire-cutting of the interiors of chocolates, caramels, canapés, fruit jellies, etc.
- The double guitar avoids having to turn the product trays for cutting: time saving and improved cutting precision
- Cuts into 5 different rectangle sizes: 15 x 22.5; 15 x 30; 15 x 45; 22.5 x 30; 30 x 45mm
- 3 square sizes: 22.5 x 22.5; 30 x 30 and 45 x 45mm
- Cutting arm to order according to the needs of each user. 2 arms required (imperative)
- The 15mm cutting arm can only be used for frontal cutting
- Cutting arms easily interchangeable, no tools required
- Dishwasher-safe base, supplied with a stainless steel plate 425 x 425 mm
- wire tensioning key and 3 spare wires

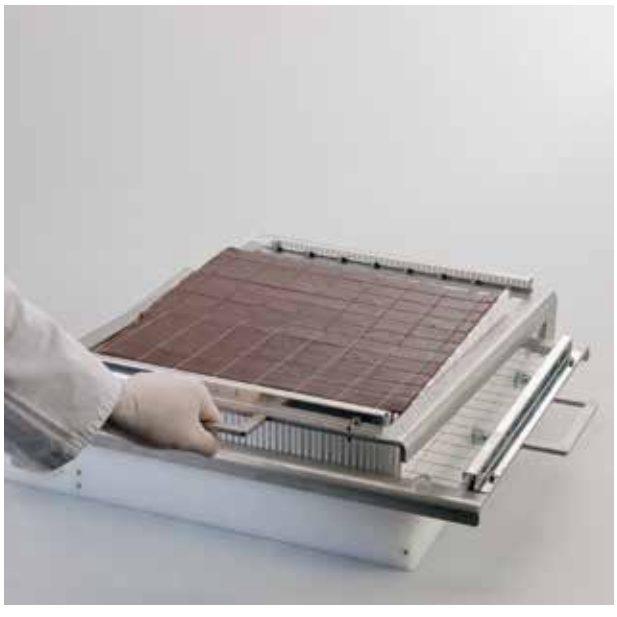

» Double Guitar

Code	Dim. (mm)	Model
77503540	500x500x160	Base
77503542	15	Cutting Arm
77503543	22,5	Cutting Arm
77503544	30	Cutting Arm
77503545	45	Cutting Arm
77503512	700	Spare S/S Strings

Spatulas

» Exoglass Heat Resistant Spatula

Code	Dim. (cm)
77502430	30

» Exoglass Heat Resistant Spatula

Code	Dim. (cm)
77503025	25
77503030	30
77503035	35
77503040	40
77503045	45
77503050	50

» Heat -Resistant Spatula

Code	Dim. (cm)
62012500	25
62013500	35
62014500	40

» Pastry Spatula

Code	Dim. (cm)
62013025	25
62013030	30
62013035	35

» Angular Spatula

Code	Dim. (cm)
62010025	25

» Spatula

Code	Dim. (cm)
62010010	10
62010013	13
62010015	15

» Wide Spatula

Code	Dim. (cm)
62012020	20
62011025	25

» Perforated Wide Spatula

Code	Dim. (cm)
62012025	25

» Pizza Spatula

Code	Dim. (cm)	Model
62010008	17	Normal
62010014	17	Perforated

» Spatula (S/S Handle)

Code	Dim. (cm)
44020001	6,5x11
44020002	8x12
44020003	10x13,5
44020004	11x16
44020005	13x17

» Serving Spatula (S/S)

Code	Dim. (cm)
62010011	25

» Serving Spatula (S/S)

Code	Dim. (cm)
62010012	24

» Pastry Spatula (S/S Handle)

Code	Dim. (cm)
44020101	20x3,5
44020102	25x3,5
44020103	30x3,5

» Pastry Knife (S/S Handle)

Code	Dim. (cm)
44020201	20x3,5
44020202	25x3,5
44020203	30x3,5

» Pastry Knife (S/S Handle)

Code	Dim. (cm)
44020301	20x3,5
44020302	25x3,5
44020303	30x3,4

» Pizza Spatula (S/S Handle)

Code	Dim. (cm)
44020006	16x4x13,5

» Pizza Roulette

Code	Ø (cm)
62010021	10

» Dough Scraper (S/S Handle)

Code	Dim. (cm)
62010006	13x11

Serving

PC Unbreakable Serving Tray

Unbreakable tray designed for catering use. Designed to meet the requirements of the catering and service industry. Allowing a multitude of possibilities for stacking that facilitates display and creativity. The decentralized lateral support, allows for varying depth height of the tray with a simple 180° flip. Allowing for a multi-layer display using multiple stacked trays. This overlapping arrangement maximizes internal space to accommodate finger food glasses of differing heights. This overlapping arrangement maximizes internal space to accommodate finger food glasses of differing heights. The sides allow storage in cupboards, and trolleys; as well as transport using the Thermobox thermal containers

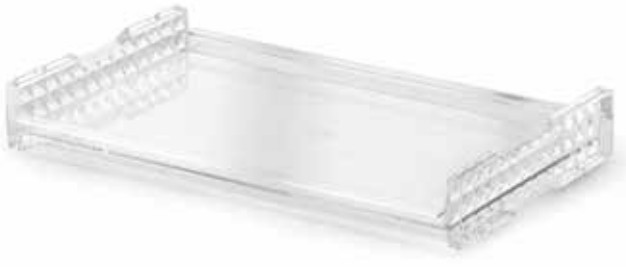

» PC Unbreakable Transparent Tray

Code	Dim. (cm)	Model
39011110	53x32,5x7	GN 1/1

» PC Unbreakable Black Tray

Code	Dim. (cm)	Model
39111110	53x32,5x7	GN 1/1

» Fiber Non-slip Round Tray

Code	Ø (cm)
68210035	35,5
68210040	40,6
68210045	45

» Wooden Non-slip Round Tray

Code	Ø (cm)
68110033	33
68110038	38
68110043	43

» Wooden Round Tray

Code	Ø (cm)
68010033	33
68010038	38
68010043	43

» Fiber Non-slip Rectangular Tray

Code	Dim. (cm)
68213040	30x40
68213753	37x53
68214565	45x65
68215668	56x68

» Wooden Non-slip Rectangular Tray

Code	Dim. (cm)
68112738	27x38
68113244	32x44
68113646	36x46
68113753	37x53
68114361	43x61

» Ecoform Non-slip Rectangular Tray

Code	Dim. (cm)
68413753	37x53

» Textured Tray

Code	Dim. (cm)
46612736	27x36
46613244	32x44
46613646	36x46
46613753	37x53

» Wooden Rectangular Tray

Code	Dim. (cm)
68012738	27x38
68013244	32x44
68013646	36x46
68013753	37x53
68014361	43x61

» Ecoform Rectangular Tray

Code	Dim. (cm)
68313753	37x53

Trays

1/1 GN Tray

Code	Dim. (mm)	lt
31611010	530x325x10	1,25
31611020	530x325x20	2,5
31611040	530x326x40	5

2/3 GN Tray

Code	Dim. (mm)	lt
31623010	354x325x10	0,75
31623020	354x325x20	1,5
31623040	354x325x40	3

1/2 GN Tray

Code	Dim. (mm)	lt
31612010	325x265x10	0,5
31612020	325x265x20	1,25
31612040	325x265x40	2,5

plast port®

Figured Tray

Code	Dim. (mm)
31611005	530x325

Serving Tray (ABS)

Code	Dim. (cm)
46012736	27x36
46013244	32x44
46013646	36x46
46013753	37x53

460 **461** **462** **463** **464** **465**

Standard Self Service

Code	Dim. (mm)	Kalınlık
35040050	280x400x25	0,50 mm
35040060	280x400x25	0,60 mm
35040070	280x400x25	0,70 mm
35040080	280x400x25	0,80 mm
35040100	280x400x25	1,00 mm

3 Partition Self Service

Code	Dim. (cm)	Model
35820003	12x25,5x1,5	3 Partition
35820004	Ø 23x2	5 Partition

Standart Self Service PC

Code	Model	Dim. (mm)
46010111	Standard	398x278x28
46010112	For Kids	360x245x26

Self Service for Breakfast (PC)

Code	Model	Dim. (mm)
46010113	Breakfast	290x180x18
46010114	Breakfast w/Egg Part	290x180x18
46010115	Indian	400x280x30

Ladle

Code	Ø (cm)	Capacity (gr)
31500001	7,8	75
31500002	8,8	100
31500003	9,5	145
31500004	10,7	220
31500005	13,2	456
31500016	15,5	661
31500007	18	975
31500008	20,7	1398
31500009	22,5	2150
31500010	25	3050

* Ø 15,5 cm and above are reinforced

Monoblock Ladle

Code	Ø (cm)	Capacity (gr)
31500065	6,5	63
31500080	8	125
31500090	9	200
31500100	10	250
31500120	12	500
31500140	14	750
31500160	16	1000
31500180	18	1250
31500200	20	2050

Sauce Ladle

Code	Ø (cm)	Capacity (gr)
31503017	5,5	67,5
31503018	6,5	70
31503019	7	72,5
31503020	7,8	75

Skimmer

Code	Ø (cm)
31600001	9,3
31600002	10,4
31600003	11,3
31600004	12,9
31600005	15,1
31600016	17,4
31600007	19,7
31600008	22,2
31600009	25,1
31600010	28

* Ø 15,5 cm and above are reinforced

Monoblock Skimmer

Code	Ø (cm)
31600080	8
31600100	10
31600120	12
31600140	14
31600160	16
31600180	18
31600200	20

Serving Equipments

» Monoblock Spoon

Code	Model	L (cm)
31601106	Short	27
31600104	Medium	38
31601104	Long	43

» Monoblock Perforated Spoon

Code	Model	L (cm)
31601107	Short	27
31600105	Medium	38
31601105	Long	43

» Serving Spoon

Code	Model	L (cm)
90000009	Short	21
90000006	Medium	30
90000005	Long	43

» Perforated Serving Spoon

Code	Model	L (cm)
90000010	Short	21
90000008	Medium	30
90000004	Long	43

» Monoblock Meat Fork

Code	Model	L (cm)
31602104	2 Prongs	50
31601002	2 Prongs	70
31601003	3 Prongs	50
31601004	3 Prongs	70

» Meat Fork for Serving

Code	Model	L (cm)
90000011	Short	21
90000007	Medium	30

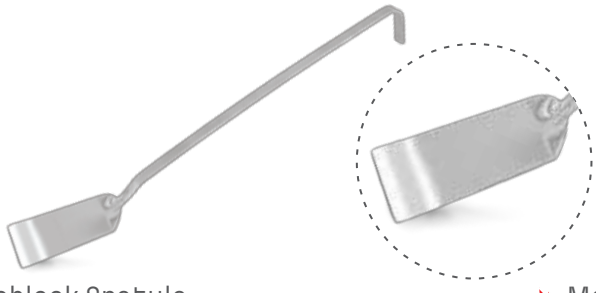

» Monoblock Spatula

Code	Model	L (cm)
52020021	Kısa	21
52020030	Orta	30
52020036	Uzun	36

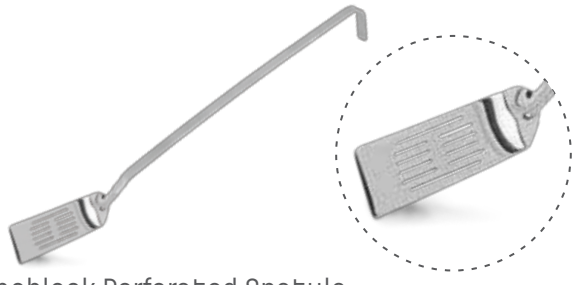

» Monoblock Perforated Spatula

Code	Model	L (cm)
52021021	Kısa	21
52021030	Orta	30
52021036	Uzun	36

» Serving Spatula

Code	Model	L (cm)
90000015	Kısa	21
90000012	Orta	30

» Perforated Serving Spatula

Code	Model	L (cm)
90000014	Kısa	21
90000013	Orta	30

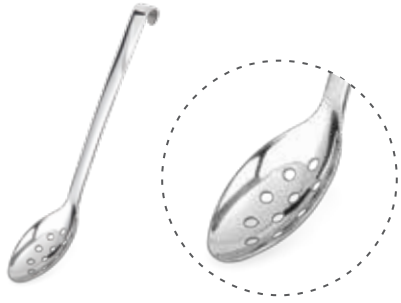

» Perforated Spoon

Code	Dim. (mm)
52010046	275x53

» Serving Spoon

Code	Dim. (mm)
52010045	275x62

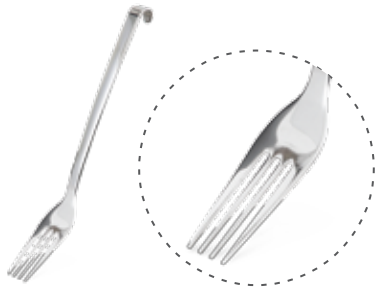

» Serving Fork

Code	Dim. (mm)
52010043	285x45

» Skimmer

Code	Dim. (mm)
52010042	270x80

» Perforated Turner

Code	Dim. (mm)
52010044	285x75

» Ladle

Code	Dim. (mm)
52010041	245x60

» Spaghetti Spoon

Code	Dim. (mm)
52010058	270x65

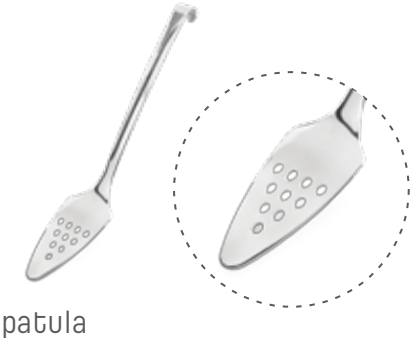

» Perforated Spatula

Code	Dim. (mm)
52010049	315x63

» Silicone Spatula

Code	Dim. (mm)
52030001	370x155

» Silicone Spaghetti Spoon

Code	Dim. (mm)
52030004	320x60

» Silicone Skimmer

Code	Dim. (mm)
52030002	370x100

» Silicone Spoon

Code	Dim. (mm)
52030003	330x65

» Silicone Tong

Code	Dim. (cm)
52030040	30

» Silicone Multi-Purpose Tong

Code	Dim. (cm)
52031030	30

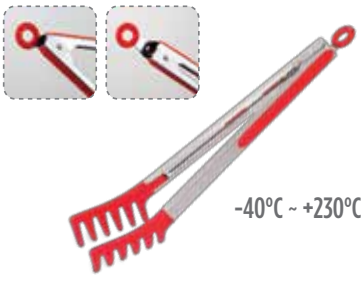

» Silicone Spaghetti Tong

Code	Dim. (cm)
52030030	30

» Silicone Serving Tong

Code	Dim. (cm)
40306021	30

» Serving Tong w/Silicone Handle

Code	Dim. (cm)
40306020	22

» PC Serving Spoon

Code	Model
46010007	Spoon
46010008	Perforated Spoon

» PC Sauce Ladle

Code	Dim. (cm)
46010009	20
46010015	24

» PC Tong

Code	Model
46010018	Pasta
46010021	Serving

460 **461** **462**

» Salad Tong

Code	Dim. (cm)
52010181	25

» Bread/Pastry Tong

Code	Dim. (cm)
52010187	25

» Serving Tong

Code	Dim. (cm)
52010189	25

» Bread/Pastry Tong Small

Code	Dim. (cm)
52020003	19,5

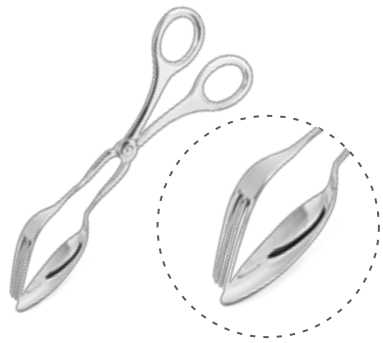

» Salad Tong Small

Code	Dim. (cm)
52020005	19,5

» Multi-Purpose Tong

Code	Dim. (cm)
52010710	25

» Spaghetti Tong Lux

Code	Dim. (cm)
52020002	24

» Pasta Tong

Code	Dim. (cm)
36302000	22

» Multi-Purpose Tong

Code	Dim. (cm)
62010030	30
62010141	41

» Chef's Tong

Code	Dim. (mm)	Model
77502913	145x10	Straight
77502021	200x25	Angular

» Salad Tong

Code	Dim. (cm)
36310000	22

» Pastry Tong

Code	Dim. (cm)
36311000	21,5

» Wide (Hamburger) Tong

Code	Dim. (cm)
52010713	24

» Grill Tong

Code	Dim. (cm)
36306001	25
36306002	27,5
36306003	32,5
36306004	40

» Charcoal Tong

Code	Dim. (cm)
36306011	50
36306012	55
36306013	65
36306014	80

» Ice Tong

Code	Dim. (cm)	Model
36303000	16	Classic
52020004	19	Lux

» Sugar Tong

Code	Dim. (cm)
36304000	12

» Fish Bone Pincer

Code	Dim. (cm)
40306022	23

» Deco Spoon Set (2 Spoons)

Code	Ø (mm)	h (mm)
77506436	75	55

» Melamine Spoon Rest

Code	Model
84010010	White
84110010	Black

» Spoon Rest

Code
52010183

» Spoon/Ladle Rest

Code	Dim. (cm)
62010009	9x17

* Ladle is not included

» Ice Cream Spoon

Code	Ø (mm)
52019039	39
52019044	44
52019050	50
52019056	56
52019063	63

» Ice Cream Spoon

Code
62010037

» Rice Scoop

Code	Ø (cm)	No
39330001	8	1
39330002	8,5	2
39330003	9,5	3
39330004	10,5	4
39330005	13,5	5

» French Fries Shovel

Code	Dim. (cm)
62010000	20

plast|port®

» Ketchup Dispenser

Code	Lt
46010022	2

plast|port®

» Mayonnaise Dispenser

Code	Lt
46010023	2

plast|port®

» Mustard Dispenser

Code	Lt
46010025	2

» Ketchup Bottle

Code	ml
43030250	250
43030500	500
43030750	750

» Mayonnaise Bottle

Code	ml
43031250	250
43031500	500
43031750	750

» Mustard Bottle

Code	ml
43032250	250
43032500	500
43032750	750

» Transparent Sauce Bottle

Code	ml
43033250	250
43033500	500
43033750	750

» Pouring Container

Code	Lt
60020001	1
60020002	2

Open Buffet

» GN 1/1 Copper Chafing Dish

Code	Dim. (cm)	Capacity (Lt)
55012012	69x49,5x52	12

» Round Copper Chafing Dish

Code	Dim. (cm)	Capacity (Lt)
55012062	50x48x49,5	7

Luxe Chafing Dish Specifications

1. Suitable for Induction Plates
2. Hydraulic Lid
3. Stackable Design
4. Glass Lid
5. Stable at 90°

Hydraulic Lid

54012012

» Code	Model	Dim. (cm)
54012012	GN 1/1 Set w/Burner-9 lt.	66x49x33
54012013	GN 1/1 Set w/Induction Heating-9 lt.	66x49x33
54012011	GN 1/1-9 lt. (Upper Part)	62,5x40x19
54010101	Induction Heating 1000W/220V	

54010101

54012013

54012011

Hydraulic Lid

54012034

» Code	Model	Dim. (cm)
54012034	GN 2/3 Set w/Burner-6 lt.	49x49x33
54012033	GN 2/3 Set w/Induction Heating-6 lt.	49x49x33
54012032	GN 2/3 - 6 lt.(Upper Part)	45,5x40x19
54010101	Induction Heating 1000W/220V	

54010101

54012033

54012032

Suitable for Induction Plates

Hydraulic Lid

54012022

» Code	Model	Dim. (cm)
54012022	GN 1/2 Set w/Burner-4 lt.	49x49x33
54012023	GN 1/2 Set w/Induction Heating-4 lt.	49x49x33
54012021	GN 1/2 - 4 lt.(Upper Part)	45,5x40x19
54010102	Induction Heating 650W/220V	

54010102

54012023

54012021

Suitable for Induction Plates

Hydraulic Lid

54012062

Code	Model	Dim. (cm)
54012062	Round Set w/Burner-6 lt.	45x55x33
54012061	Round Set w/Induction Heating-6 lt.	45x55x33
54012060	Round - 6 lt.(Upper Part)	50x44x19
54010101	Induction Heating 1000W/220V	

54010101

54012061

54012060

Suitable for Induction Plates

Hydraulic Lid

54012016

» Code	Model	Dim. (cm)
54012016	Soup Station Set w/Burner-11 lt.	49x49x33
54012017	Soup Station Set w/Induction Heating-11 lt.	49x49x33
54012015	Soup Station - 11 lt.(Upper Part)	45,5x40x19
54010101	Induction Heating 1000W/220V	

54010101

54012017

54012015

Suitable for Induction Plates

Stainless Steel Tap

Lid has
self ice store

» Lux Juice Dispenser

Code	Lt
54012112	12

Stainless Steel Tap

» Lux Coffee Dispenser

Code	Lt
54012212	12

Modern Chafing Dish Spec ifications

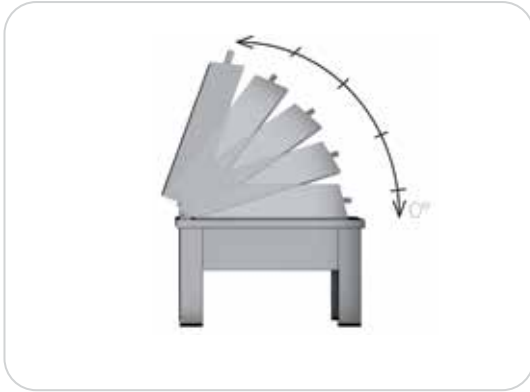

- Easily removable cover, at 90°
- Light and easy-to-handle cover
- Automatic block of cover pull out when in operation (from 0° to 89°)
- Closing and opening slowed by cover thanks to patented system
- The cover stops, when released, in any position from 0° to 70°
- Over 70° the cover opens fully when released
- The hinge is a spring mechanism, inalterable in time,it does not need regulation and maintenance as it has no clutch
- All the machineries are built in refined stainless materials, thus resistant to corrosion, humid environment and suitable for food contact
- The chafing dish is designed to collect condensation, in order to keep the support base completely dry
- Both electric warming and solid-fuelburners can be used
- Not suitable for induction cookers

Modern Chafing Dish

Patented Lid

74012012

54010800

» GN 1/1 Chafing Dish w/Glass Windowed Lid

Code	Model	Dims. (cm)
74012012	GN 1/1 Set w/Burner-9 lt.	49x49x33
74012013	GN 1/1 Set w/Induction Heating-9 lt.	49x49x33
54010800	Electrical Heating Unit w/9 Temprature Control	

Patented Lid

54010800

74012034

» GN 2/3 Chafing Dish w/Glass Windowed Lid

Code	Model	Dims. (cm)
74012034	GN 2/3 Set w/Burner-6 lt.	46x42x32
74012033	GN 2/3 Set w/Induction Heating-6 lt.	46x42x32
54010800	Electrical Heating Unit w/9 Temprature Control	

* Not suitable for induction cookers

» Modern Juice Dispenser

Code	Lt
74011112	12

» Modern Coffee Dispenser

Code	Lt
74011000	10

» Modern Corn Flakes Dispenser

Code	Lt
74011231	7

Hydraulic Lid

54011012

» Code	Model	Dims. (cm)
54011012	GN 1/1 Set w/Burner-9 lt.	49x49x33
54011013	GN 1/1 Set w/Induction Heating-9 lt.	49x49x33
54011011	GN 1/1-9 lt. (Upper Part)	45,5x40x19
54010101	Induction Heating 1000W/220V	

54010101

54011013

54011011

Suitable for Induction Plates

Premium Chafing Dish

Hydraulic Lid

54011034

Code	Model	Dims. (cm)
54011034	GN 2/3 Set w/Burner-6 lt.	45,5x41x34
54011033	GN 2/3 Set w/Induction Heating-6 lt.	45,5x41x34
54011032	GN 2/3 - 6 lt.(Upper Part)	45,5x41x21
54010101	Induction Heating 1000W/220V	

54010101

54011033

54011032

Suitable for Induction Plates

Hydraulic Lid

54011022

Code	Model	Dims. (cm)
54011022	GN 1/2 Set w/Burner-4 lt.	49x49x33
54011023	GN 1/2 Set w/Induction Heating-4 lt.	49x49x33
54011021	GN 1/2 - 4 lt.(Upper Part)	45,5x40x19
54010102	Induction Heating 650W/220V	

54010102

54011023

54011021

Suitable for Induction Plates

Premium Chafing Dish

Hydraulic Lid

54011062

Code	Model	Dims. (cm)
54011062	Round Set w/Burner-6 lt.	52x45,5x34,5
54011061	Round Set w/Induction Heating-6 lt.	52x45,5x34,5
54011060	Round - 6 lt.(Upper Part)	52x45,5x21
54010101	Induction Heating 1000W/220V	

54010101

54011061

54011060

Suitable for Induction Plates

Hydraulic Lid

54011016

» Code	Model	Dims. (cm)
54011016	Soup Station Set w/Burner-11 lt.	49x49x33
54011017	Soup Station Set w/Induction Heating-11 lt.	49x49x33
54011015	Soup Station - 11 lt.(Upper Part)	45,5x40x19
54010101	Induction Heating 1000W/220V	

54010101

54011017

54011015

Suitable for Induction Plates

Premium Dispensers

» Premium Milk Dispenser

Code	Lt
54011212	6

» Premium Juice Dispenser

Code	Lt
54011112	12

» Premium Coffee Dispenser

Code	Lt
59011019	19

» 1/1 Stand w/Warmer

Code	Model
54014011	1/1

» 2/3 Stand w/Warmer

Code	Model
54014032	2/3

» Round Stand w/Warmer

Code	Model
54014060	Round

Delux Chafing Dish Specifications

1. Stable at 90°
2. Stable at 180°
3. For quick and easy cleaning
4. Electrical heating unit w/9 Temperature Control
5. Stackable Design

Deluxe Chafing Dish w/Glass Windowed Lid

» GN 2/3 Roll Top w/Glass Windowed Lid

Code	Model	Dim. (cm)
54014732	6 lt. w/Burner	51x49x34
54014832	6 lt. w/Electric Heating	51x49x34

» Round Roll Top w/Glass Windowed Lid

Code	Model	Dim. (cm)
54014731	6 lt. w/Burner	53x53x35
54014831	6 lt. w/Electric Heating	53x53x35

» Round Roll Top w/Soup Tureens w/Glass Windowed Lid

Code	Model	Dim. (cm)
54014730	6 lt. w/Burner	53x53x35
54014830	6 lt. w/Electric Heating	53x53x35

» Built-In Round Shaped w/Glass Windowed Lid

Code	Model	Dim. (cm)
54015731	6 lt. w/Burner	63x48x26
54015831	6 lt. w/Electric Heating	63x48x26

» Built-In Round Shaped w/Soup Tureen w/Glass Windowed Lid

Code	Model	Dim. (cm)
54015730	6 lt. w/Burner	63x48x26
54015830	6 lt. w/Electric Heating	63x48x26

Delux Chafing Dish

» GN 1/1 Roll Top

Code	Model	Dim. (cm)
54010733	9 lt. w/Burner	73x49x34
54010833	9 lt. w/Electric Heating	73x49x34

» GN 2/3 Roll Top

Code	Model	Dim. (cm)
54010732	6 lt. w/Burner	51x49x34
54010832	6 lt. w/Electric Heating	51x49x34

SPECIFICATIONS

- Stable at 90°
- Stable at180°
- For quick &easy cleaning
- Electrical heating unit w/9 Temperature Control
- Stackable design

» Round Roll Top

Code	Model	Dim. (cm)
54010731	6 lt. w/Burner	53x53x35
54010831	6 lt. w/Electric Heating	53x53x35

» Roll Top w/Soup Tureens

Code	Model	Dim. (cm)
54010738	2x4,5 lt. w/Burner	73x49x34
54010838	2x4,5 lt. w/Electric Heating	73x49x34

» Round Roll Top w/Soup Tureens

Code	Model	Dim. (cm)
54010730	6 lt. w/Burner	53x53x35
54010830	6 lt. w/Electric Heating	53x53x35

» Built-In GN 1/1

Code	Model	Dim. (cm)
54012733	9 lt. w/Burner	63x46,5x24
54013733	9 lt. w/Electric Heating	63x46,5x24

SPECIFICATIONS

- Stable at 90°
- Stable at180°
- For quick &easy cleaning
- Electrical heating unit w/9 Temperature Control
- Stackable design

» Built-In Round Shaped

Code	Model	Dim. (cm)
54012731	6 lt. w/Burner	63x48x26
54013731	6 lt. w/Electric Heating	63x48x26

» Built-In Round Shaped w/Soup Tureen

Code	Model	Dim. (cm)
54012730	6 lt. w/Burner	63x48x26
54013730	6 lt. w/Electric Heating	63x48x26

» GN 1/1 Roll Top

Code	Model	Dim. (cm)
54010723	9 lt. w/Burner	75x50x33
54010823	9 lt. w/Electric Heating	75x50x33

» Roll Top Round Shaped

Code	Model	Dim. (cm)
54010721	6 lt. w/Burner	53x49,5x35
54010821	6 lt. w/Electric Heating	53x49,5x35

» Round Shaped w/Soup Tureen

Code	Model	Dim. (cm)
54010720	6 lt. w/Burner	53x49,5x35
54010820	6 lt. w/Electric Heating	53x49,5x35

» Eliptic Roll Top

Code	Model	Dim. (cm)
54010736	9 lt. w/Burner	66x56x33
54010836	9 lt. w/Electric Heating	66x56x33

» GN 1/1

Code	Model	Dim. (cm)
54010433	9 lt. w/Burner	60x35x32
54010434	9 lt. w/Electric Heating	60x35x32

» Mini Chafing Dish

Code	Model	Dim. (cm)
40210151	w/Burner	32x32

» Soup Tureen

Code	Capacity (lt)
47010013	13

* Water Pan is made of stainless steel

» Sauce Tureen

Code	Capacity (lt)
47010002	2

Chafing Dish Food Pans

» GN 1/1 Porcelain

Code	Dim. (mm)
70020101	530x325

» GN 1/2 Porcelain

Code	Dim. (mm)
70020102	325x265

» GN 2/3 Porcelain

Code	Dim. (mm)
70020203	354x325

» GN 1/3 Porcelain

Code	Dim. (mm)
70020103	325x176

» Round Porcelain

Code	Dim. (cm)
70020100	39x6,5

» Round Divided Porcelain

Code	Dim. (cm)
70021100	39x6,5

» Round Tray (S/S)

Code	Dim. (cm)	Lt
30703565	35x6,5	6,2

» Round Divided Tray (S/S)

Code	Dim. (cm)
70023100	38,5x38,5x6,5

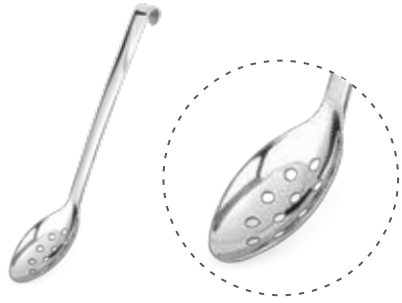

» Perforated Spoon

Code	Dim. (mm)
52010046	275x53

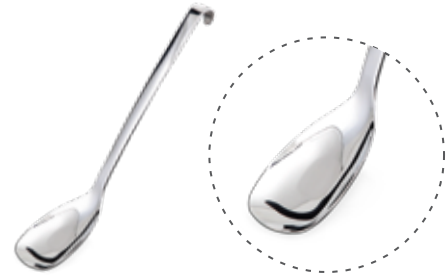

» Serving Spoon

Code	Dim. (mm)
52010045	275x62

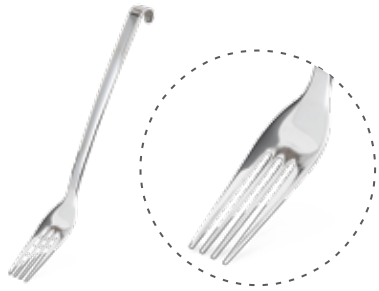

» Serving Fork

Code	Dim. (mm)
52010043	285x45

» Skimmer

Code	Dim. (mm)
52010042	270x80

» Perforated Turner

Code	Dim. (mm)
52010044	285x75

» Ladle

Code	Dim. (mm)
52010041	245x60

» Spaghetti Spoon

Code	Dim. (mm)
52010058	270x65

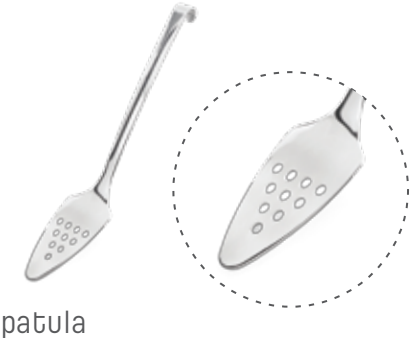

» Perforated Spatula

Code	Dim. (mm)
52010049	315x63

» Electrical Heating Unit w/9 Temprature Control

Code	Power
54010800	700 Watt

» Induction Heating

Code	Power
54010101	1000 W

» Burner Holder

Code
54010100

» Name Tag

Code	h(cm)
62010005	5
62011010	10
62013020	20

» Spoon Rest

Code
52010183

» Spoon/Ladle Rest

Code	Dim. (cm)
62010009	9x17

» Lux Juice Dispenser

Code	Lt
54012112	12

» Lux Coffee Dispenser

Code	Lt
54012212	12

* Can be use w/o wire stand

» Ice Tea Dispenser (Glass)

Code	Lt
59057900	7,9

» Premium Juice Dispenser

Code	Lt
54011112	12

» Premium Coffee Dispenser

Code	Lt
59011019	19

• Lid has self ice store

» Lux Milk Can

Code	Lt
54011212	6

» Modern Juice Dispenser

Code	Lt
74011112	12

» Modern Coffee Dispenser

Code	Lt
74011000	10

» Single Juice Dispenser

Code	Dim. (cm)	Lt
59039021	37x23x60	7

» Double Juice Dispenser

Code	Dim. (cm)	Lt
59039022	37x45x69	14

» Modern Corn Flakes Dispenser

Code	Lt
74011231	7

» Corn Flakes Dispenser

Code	Dim. (cm)	Lt
54021231	42x23x62	7,5
54021232	42x45x6	15

» Corn Flakes Dispenser

Code	Model
40010001	Single
40010002	Double
40010003	Triple

» Corn Flakes Dispenser

Code	Lt
54010010	10

Heat Retaning Infrared Lamps

- Adjustable helix cable (55 - 130 cm)
- 230 Volt / 1 Ph. / 50 Hz; 250 W
- Suitable for both BOH (Back of the House) and FOH (Front of the House) using
- On - Off Switch

470 471 472 473

473 471 474 475

» Classic Infrared Lamp

Code	Model	Øxh (mm)
47010006	Lamp (Chrome)	245x260
47110006	Lamp (Brass)	245x260
47210006	Lamp (Copper)	245x260
47310006	Lamp (Black)	245x260

» Dome Infrared Lamp

Code	Model	Øxh (mm)
47310014	Lamp (Black)	270x320
47110014	Lamp (Brass)	270x320
47410014	Lamp (Anthracite)	270x320
47510014	Lamp (Maroon)	270x320

*** w/infrared bulb**

476 471 472 475

477 473 474 475

» Vintage Infrared Lamp

Code	Model	Øxh (mm)
47610015	Lamp (Dark Green)	310x265
47110015	Lamp (Brass)	310x265
47210015	Lamp (Copper)	310x265
47510015	Lamp (Maroon)	310x265

*** w/infrared bulb**

» Conic Infrared Lamp

Code	Model	Øxh (mm)
47710016	Lamp (Anodised Alu.)	155x270
47310016	Lamp (Black)	155x270
47410016	Lamp (Anthracite)	155x270
47510016	Lamp (Maroon)	155x270

*** w/infrared bulb**

- Hanging Rod.: h:140 cm
- Can be shortened
- Suitable for both BOH (Back of the House) and FOH (Front of the House) using
- On - Off Switch

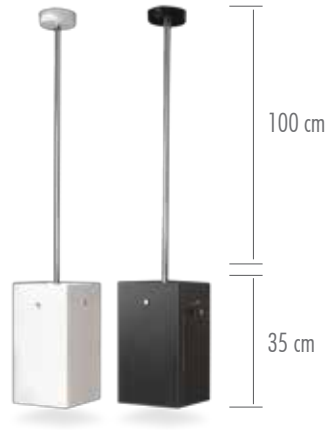

» Infrared Square Lamp

Code	Model	Dim. (cm)
47010009	White	20x20x35
47110009	Black	20x20x35

* w/infrared bulb

- Lowers infrared lamps 100 cm
- Can be use when ceiling is too high or need to hang more than one infrared lamp

» Hanger Unit (for 3 Lamp)

Code	Height (cm)	Dim. (cm)
47010007	50 - 100	110

* Adjustable height

» Hanger Unit (for 4 Lamp)

Code	Height (cm)	Dim. (cm)
47010008	50 - 100	140

* Adjustable height

» Self Standing Single Heat Lamp

Code	Dim. (cm)	Power
47010003	22x28x70	250 W

* w/infrared bulb

» Self Standing Doouble Heat Lamp

Code	Dim. (cm)	Power
47010004	50x30x70	2x250 W

* w/infrared bulb

» Heat Lamp w/Warming Plate

Code	Model	Dim. (cm)
47013011	1/1	40x60

» Heat Lamp w/Warming Plate

Code	Model	Dim. (cm)
47013021	2/1	71x59

- Komple paslanmaz çelik gövde
- Buz aküsü ile uzun süreli soğuk tutma
- Tüm GN küvetler ile uyumlu

- Komple paslanmaz çelik gövde
- 0°C - 60°C termostat kontrolü
- 200 W ısı ayarı

» Cold Plate

Code	Model	Dim. (cm)
47012011	1/1	40x60
47012021	2/1	71x59

» Hot Plate

Code	Model	Dim. (cm)
47010011	1/1	40x60
47010021	2/1	71x59

» Sneeze Guard w/Light

Code	Power	Dim. (cm)
47000043	100 W	110x75x65
47000044	100 W	140x75x65

» Sneeze Guard w/Light and Heating

Code	Power	Dim. (cm)
47100043	1500 W	110x75x65
47100044	1600 W	140x75x65

Black 470 | White 471 | Wood 472

» Multi Purpose Neutral Service Unit

Code	Dim. (cm)
47000030	64x46x10

*Can be used to display food products with different inserts

Black 470 | White 471 | Wood 472

» Bread Cutting Unit

Code	Dim. (cm)
47000031	64x46x10

Black 470 | White 471 | Wood 472

» Cutlery Unit

Code	Dim. (cm)
47000032	64x46x10

*Can be used to display food products with different inserts

Black 470 | White 471 | Wood 472

» Cheese Service Unit

Code	Dim. (cm)
47000033	64x46x10

Black	White	Wood
470	471	472

» Service Unit w/Basket

Code	Dim. (cm)
47000034	64x46x10

Black	White	Wood
470	471	472

» Multipurpose Tray

Code	Dim. (cm)
47000035	64x46x8

*Special Compartments for napkin, tea bags, sugar, salt etc.

Black	White	Wood
470	471	472

» 2 Deck Display Unit

Code	Dim. (cm)
47010022	64x46x30

Black	White	Wood
470	471	472

» 3 Deck Display Unit

Code	Dim. (cm)
47010023	38x73x63

* Do not use w/o water

» Multi Purpose Cold Unit

Code	Dim. (cm)
47010010	64x46x10

* w/ice pack

Black 470 | White 471 | Wood 472

» Display Unit For Cold Cuts

Code	Dim. (cm)
47000036	64x46x8

Black 470 | White 471 | Wood 472

» Cheese Display Units

Code	Dim. (cm)
47000037	64x46x8

Black 470 | White 471 | Wood 472

- 220 V ; Digital Termostate control
- Max heat 90*C

» Multi Purpose Hot Unit

Code	Dim. (cm)	Power
47010010	64x46x10	1000 W

Black 470 | White 471 | Wood 472

- 230 / 50 / 1- 1000 W

» Soup Unit w/2 Pots

Code	Dim. (cm)	Capacity
47000038	64x46x20	2x8 Lt

Black 470 | White 471 | Wood 472

- 230 / 50 / 1- 1000 W

» Chafing Dish

Code	Dim. (cm)
47000039	64x46x20

Black 470 | White 471 | Wood 472

Black	White	Wood
470	471	472

» Cold Drink Dispenser

Code	Dim. (cm)	Capacity (Lt)
47000040	30x46x61	7

Black	White	Wood
470	471	472

» Hot Drink Dispenser

Code	Dim. (cm)	Capacity (Lt)	Power
47000041	30x46x61	5	250 W

Black	White	Wood
470	471	472

» Cold Drink Dispenser

Code	Dim. (cm)	Capacity
47000042	64x20x16	4x1,5 Lt Bottle

Induction Cookers

- AISI 304 stainless steel body
- Cooking Surface: Vitroceramic top glass
- Glass touches control panel
- Amp load : 10 A
- On/Off, manual power setting (+/-) with a 1 digit display
- 230 V; AC 50 - 60 Hz
- 2200 W
- Coil: Ø 180 mm
- Complies with European standards for safety of electrical appliances, for EMC and for Rohs

Countertop Induction Cooker

Code	Dim. (mm)	Power	Weight
47100002	305x305x77	2200 W	4 Kg

- AISI 304 stainless steel body
- Cooking Surface: Vitroceramic top glass
- Glass touches control panel
- Amp load : 12 A
- On/Off, manual power setting (+/-) with 2 digits display, 3 presets and timer control with 2 digits display
- 230 V; AC 50 - 60 Hz
- 2800 W
- Coil: Ø 210 mm
- Complies with European standards for safety of electrical appliances, for EMC and for Rohs

Countertop Induction Cooker

Code	Dim. (mm)	Power	Weight
47100003	410x315x77	2800 W	6 Kg

- High hardness top black crystal panel
- Control panel with LCD display
- EHR equal heating function
- 2 hours shut-off protective function
- Cookware automatic detection function
- 220 V
- 1500 W
- 20 section temperature adjustment function

Built-In Induction Cooker

Code	Dim. (mm)	Power	Weight
88400001	277x277x60	1500 W	2,5 Kg

- Sleek touch control with LED display
- EHR even heating function
- 210 mm large size solenoid
- Ceramic glass surface
- Double ventilation-fan design
- Cookware automatic detection function
- 2 hours shut-off protective function
- 20 section temperature adjustment function
- 220 V
- Coil : Ø 210 mm

Built-In Induction Cooker

Code	Dim. (mm)	Power
88400002	320x340x69	1800 W

- AISI 304 stainless steel body
- Cooking Surface: Vitroceramic top glass
- Glass touches control panel
- Amp load : 7 A
- On/Off, manual power setting (+/-) and timer control with 2 digits display (works for both timer and power)
- 230 V; AC 50 - 60 Hz
- 1500 W
- Coil: Ø 180 mm
- Complies with European standards for safety of electrical appliances, for EMC and for Rohs

» Countertop Pastry Induction Cooker

Code	Dim. (mm)	Power	Weight
47100001	365x461x77	1500 W	4,4 Kg

- AISI 304 stainless steel body
- Cooking Surface: Vitroceramic top glass
- Glass touches control panel
- Amp load : 13 A
- On/Off, manual power setting (+/-) and timer control with 2 digits display (works for both timer and power)
- 230 V; AC 50 - 60 Hz
- 3000 W
- Coil: Ø 220 mm
- Complies with European standards for safety of electrical appliances, for EMC, for Rohs and Intertek NSF & UL standards

» Countertop Induction Cooker

Code	Dim. (mm)	Power	Weight
47100004	450x390x78	3000 W	6,1 Kg

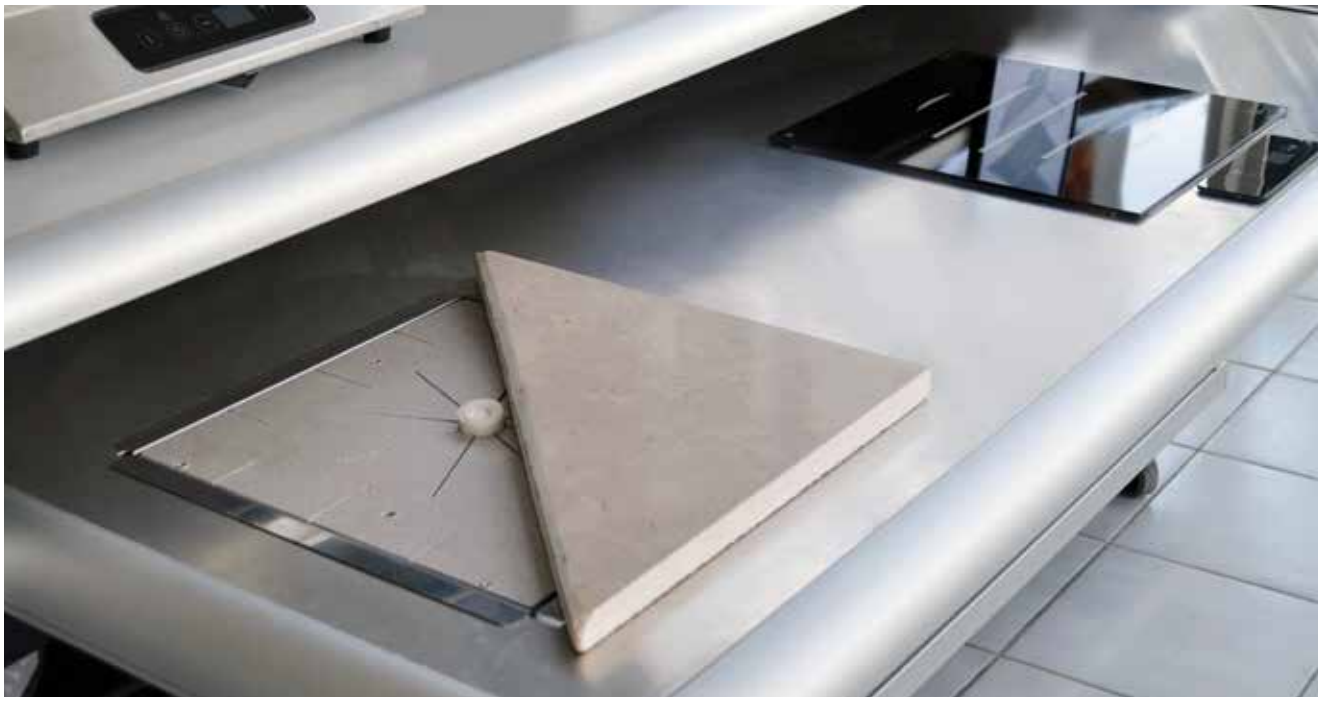

- AISI 304 stainless steel body
- Cooking Surface: Vitroceramic top glass Dual Cooking Concept
- Glass touches control panel
- Amp load : 15 A
- On/Off, right-left zone, 2 manual power setting (+/-) with 2 digits display, keep warm setting for buffet use
- 230 V; AC 50 - 60 Hz
- 2x1750 W
- Coil: Ø 220 mm
- Complies with European standards for safety of electrical appliances, for EMC, for Rohs and Intertek NSF & UL standards

» Countertop Double Induction Cooker

Code	Dim. (mm)	Power	Weight
47100005	405x530x78	2x1750 W	8,3 Kg

- AISI 304 stainless steel body
- Cooking Surface: Vitroceramic top glass
- Glass touches control panel
- Amp load : 2x13 A
- (x2) On/Off, right-left zone, manual power setting (+/-) and timer control with 2 digits display (works for both power and timer)
- 230 V; 208/240 V; AC 50-60 Hz
- 2x3000 W
- Coil: Ø 210 mm
- Complies with European standards for safety of electrical appliances, for EMC, for Rohs and Intertek NSF & UL standards

» Countertop Double Induction Cooker

Code	Dim. (mm)	Power	Weight
47100006	405x650x69	2x3000 W	10 Kg

- AISI 304 stainless steel body
- Cooking Surface: Vitroceramic wok bowl
- Glass touches control panel
- Amp load : 13 A
- On/Off, manual power setting (+/-) and timer control with 2 digits display (works for both timer and power)
- 230 V; 208/240 V; AC 50-60 Hz
- 3000 W
- Coil: Ø 280 mm
- Complies with European standards for safety of electrical appliances, for EMC, for Rohs and Intertek NSF & UL standards

» Countertop Wok Induction Cooker

Code	Dim. (mm)	Power	Weight
47100007	430x390x161	3000 W	10,1 Kg

- AISI 304 stainless steel body
- Cooking Surface: Stones such as granite
- Glass touches control panel
- Amp load : 13 A
- On/Off, manual temperature setting (+/-) with 4 digits display and timer control
- 230 V ; AC 50 - 60 Hz
- 3000 W
- Coil: Ø 210 mm
- Complies with European standards for safety of electrical appliances, for EMC, for Rohs and Intertek NSF & UL standards

» Built-In Induction Cooker

Code	Dim. (mm)	Power	Weight
47100008	340x340x173	3000 W	5 Kg

*** Installation dimensions : 346x346 mm**

- AISI 304 stainless steel body
- Cooking Surface: Vitroceramic top glass
- Glass touches control panel
- Amp load : 3 A
- On/Off, manual temperature setting (+/-) with 4 digits display and timer control
- 230 V; 208/240 V; AC 50-60 Hz
- 650 W
- 40-90°C arası 9 Kademe
- Complies with European standards for safety of electrical appliances, for EMC, for Rohs and Intertek NSF & UL standards

» Built-In Induction Heater

Code	Dim. (mm)	Power	Weight
47100009	376x376x173	650 W	8 Kg

*** Installation dimensions : 346x346 mm**

- AISI 304 stainless steel body
- Cooking Surface: Stones such as granite
- Glass touches control panel
- Amp load : 3 A
- On/Off, manual temperature setting (+/-) with 4 digits display and timer control
- 230 V; 208/240 V; AC 50-60 Hz
- 650 W
- 40-90°C arası 9 Kademe
- Complies with European standards for safety of electrical appliances, for EMC, for Rohs and Intertek NSF & UL standards

» Under Counter Induction Heater

Code	Dim. (mm)	Power	Weight
47100010	340x340x168	650 W	8 Kg

*** Installation dimensions : 346x346 mm**

» Elevator Stand

Code	Dim. (cm)
54031717	17x17x17
54030020	20x20x20
54032323	23x23x23
54032626	26x26x26

» Stand

Code	Dim. (cm)
58026040	60x30x4
58026080	60x30x8
58026012	60x30x12

- Contemporary cooling trays for salad, starters, deserts, canapé and anything else that need to be chilled.
- Ideal solution for the catering & every buffet.
- Available in 4 popular dimensions and 2 modern colors.
- You may use them with the 2 or 3 tier stand and save space on your table tops.

» Stand

Code	Dim. (cm)
54040002	40x26x40

» GN Set w/Ice Boxes

Code	Model
54040101	GN 1/1 Set
54040304	GN 3/4 Set
54040204	GN 2/4 Set
54040102	GN 1/2 Set

540 ■ **541** □

» GN

Code	Model
54041101	GN 1/1
54041304	GN 3/4
54041204	GN 2/4
54041102	GN 1/2

540 ■ **541** □

» Ice Box

Code
54040001

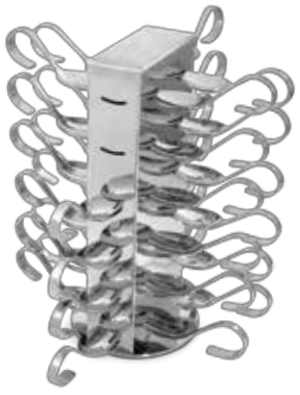

Bowl Display Stand

Code	Dim. (cm)	Model
40341358	Stand 46x5	3 Compartment
40341357	Stand 57x10,5	4 Compartment
40341356	Stand 67x16	5 Compartment
58020909	Melamine Square Plate 9x9x5,5	

*** Elevator feet not included the price.**

Amuse Bouche Spoon Stand

Code	Dim. (cm)
40160150	15x34 (36 Spoons)
40160151	30x37 (60 Spoons)

***w/o Amuse Bouche Spoons**

Amuse Bouche Spoon

Code	Dim. (mm)
40150500	4,5
40150501	6,5

Fruit Stand

Code	Model	Dim. (cm)
40290001	2 Tiered	17
40290002	3 Tiered	28

Cake Stand

Code	Øxh (cm)
32502205	22x5
32502405	24x5
32503005	30x5
32503605	36x5
32502210	22x10
32502410	24x10
32503010	30x10
32503610	36x10

Cake Stand w/Cover

Code	Dim. (cm)	Model
80010005	30,5x30,5x11,5	Round
80010007	39x16,5x12,5	tangular

Egg Stand w/Heater

Code	Dim. (cm)
40200001	26x40x15(24 Partition)
40200000	32x52x15(32 Partition)

Honey Comb Stand

Code	Dim. (cm)
40340090	23x68x32

*** w/o porcelain plate**

Cutlery Stand

Code	Dim. (cm)
40160223	43x15x19

***Chamber: Ø 13, Depth: 14**

» Tulip

Code	Dim. (cm)
58021075	10x7,5x5

580 581

» Rose

Code	Dim. (cm)
58021008	10x7,8x3,5

580 581

» Daisy

Code	Dim. (cm)
58020808	8x8x3,3

580 581

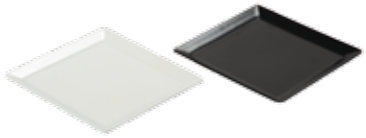

» Leaf

Code	Dim. (cm)
58021010	10x10

580 581

» Lily

Code	Dim. (cm)
58021007	10x7x2,5

580 581

» Miniatures

Code	Capacity
46010030	30 ml
46011060	60 ml

460 462 465 466

» Square Mini Plate

Code	Dim. (cm)
58020909	9x9x5,5

» Square Plate

Code	Dim. (cm)
58021313	13x13x7

» Round Bowl

Code	Dim. (cm)
58021307	Ø 13x7

» PC Sauce Cup

Code	Capacity (ml)
46010040	40
46010055	55

» Melamine Slide Display Spoon

Code	Dim.(mm)
84010016	194x65x55
84110016	194x65x55

840 841

» Amuse Bouche Spoon

Code	Dim.(cm)
40150500	4,5
40150501	6,5

» Melamine Glass-like Pente Pot Display

Code	Dim. (mm)	Pcs/Ctn
84015085	50x85	200

» Melamine Glass-like Bowl Display

Code	Dim. (mm)	Pcs/Ctn
84046570	65x70	100

» Melamine Glass-like Cubic Bowl Display

Code	Capacity	Pcs/Ctn
84040012	1,2 Lt	60

» Crystal Matt Display Tray

Code	Dim. (cm)
58013010	300x100x18
58013015	300x150x18
58013020	300x200x18
58013030	300x300x18
58014030	300x400x18

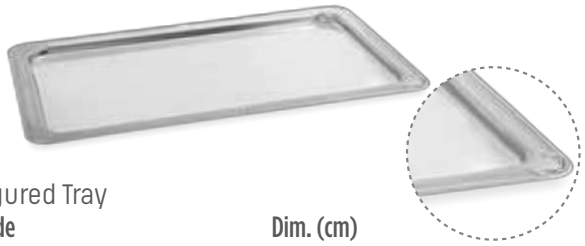

» Figured Tray

Code	Dim. (cm)
31611005	530x325

» Patterned Unbreakable Tray

Code	Dim. (cm)
54041525	15x25
54042040	20x40
54042533	25x33
54043040	30x40
54043333	33x33
54043353	33x53

» Melamine GN Display Plate

Code	Dim. (mm)	Model
58020101	530x325	GN 1/1
58020204	530x162	GN 2/4

» Melamine Rectangular Shallow Plate

Code	Dim. (cm)
58023620	36x20x4
58025027	50x27x5

PC Unbreakable Buffet Display Trays

Unbreakable tray designed for catering use. Designed to meet the requirements of the catering and service industry. Allowing a multitude of possibilities for stacking that facilitates display and creativity. The decentralized lateral support, allows for varying depth height of the tray with a simple 180° flip. Allowing for a multi-layer display using multiple stacked trays. This overlapping arrangement maximizes internal space to accommodate finger food glasses of differing heights. This overlapping arrangement maximizes internal space to accommodate finger food glasses of differing heights. The sides allow storage in cupboards, and trolleys; as well as transport using the Thermobox thermal containers

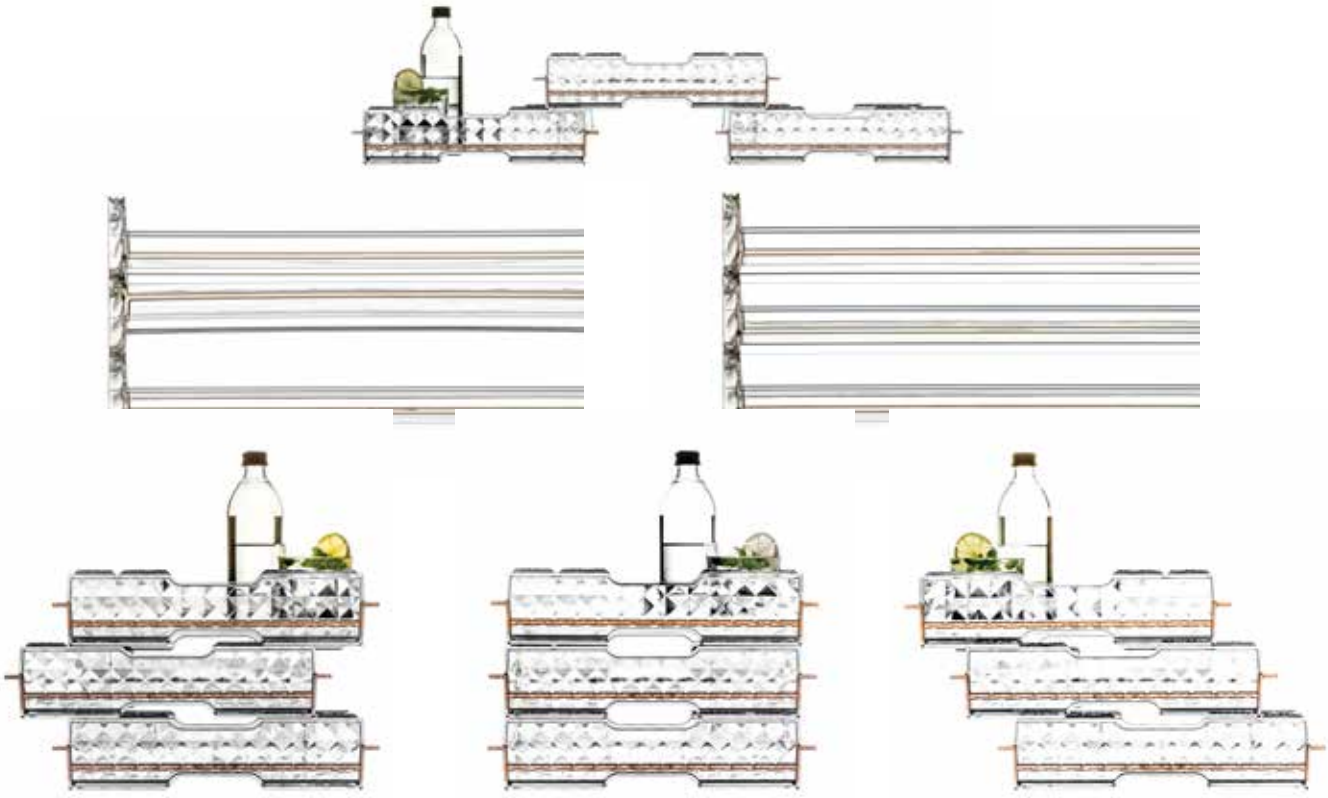

» PC Unbreakable Black Tray

Code	Dim. (cm)	Model
39111110	53x32,5x7	GN 1/1

» PC Unbreakable Transparent Tray

Code	Dim. (cm)	Model
39011110	53x32,5x7	GN 1/1

* Trays can be use in Thermoboxes

» PC Twist Riser

Code	Dim. (cm)
84010050	5
84010100	10
84010150	15

Transparent **840** Black **841**

» Non-slip Elevator

Code	Dim. (cm)
58022010	10
58022015	15

* Stackable to create a higher elevator.

» Elevator

Code	Øxh (cm)
40100420	20x5
40100430	23x5
40100450	29x5

» Square Wood Riser

Code	Dim. (cm)
69011010	10x10x10
69011515	15x15x15
69012020	20x20x20

» Sextagon Wood Riser

Code	Dim. (cm)
69021414	14x10
69021919	19,5x10
69022525	25x10

» Elevator Feet

Code	Dim. (cm)
40100900	6x6
40100901	11,5x6
40100902	16,5x6

» Elevator Shears Model

Code	Dim. (cm)
40601811	21x21x7
40601812	21x21x12
40601813	21x21x17

Slate Display Plates

- Homogeneous heat distribution keeps foods warm
- For cold serving keep slates in fridge
- Dark colour, pattern and naturality of slate stone makes your presantations elegant
- You can polish your plates with olive oil easyly
- Non-stick, easy cleaning
- High-heat resisting
- Dishwasher safe
- Do not use on direct flame or in microwave

» Slate Display Plate

Code	Model	Dim. (mm)
78001100	GN 1/1	530x325
78001200	GN 1/2	265x325
78001300	GN 1/3	176x325
78011400	GN 1/4	65x162
78012400	GN 2/4	540x165

» Slate Square Display Plate

Code	Dim. (mm)
78001515	150x150
78002020	200x200
78002525	250x250
78003030	300x300

» Slate Rectangular Display Plate

Code	Dim. (cm)
78002010	20x10
78002512	25x12
78003011	30x11
78003016	30x16
78003020	30x20
78004030	40x30

» Slate Round Display Plate

Code	Ø (cm)
78002850	28,5

» Slate Display Stand

Code	Model	h (cm)	Ø (cm)
78000002	2 Tiered	23	20/25
78000003	3 Tiered	33	20/25,5/30

Melamine Buffet Displays

» Matt Melamine Bowl Terracotta

Code	Model	Dim. (mm)	Capacity (Lt)
84111200	1/2	325x265x70	2,5
84111400	1/4	265x162x70	1
84111600	1/6	176x162x70	0,7

» Matt Melamine Bowl Stone

Code	Model	Dim. (mm)	Capacity (Lt)
84011200	1/2	325x265x70	2,5
84011400	1/4	265x162x70	1
84011600	1/6	176x162x70	0,7

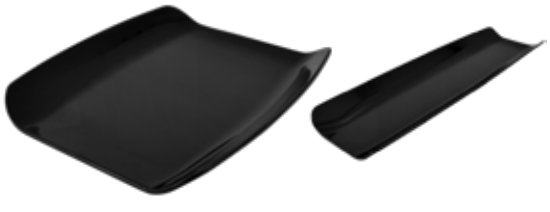

» Melamine Curved Gastro Display Tray White

Code	Model	Dim. (mm)
84212400	2/4	530x162x40
84211200	1/2	265x325x40

» Melamine Curved Gastro Display Tray Black

Code	Model	Dim. (mm)
84121000	2/4	530x162x40
84122000	1/2	265x325x40

» Melamine Lotus Bowl White

Code	Dim. (mm)	Capacity (Lt)
84012500	250x232x165	2,5

» Melamine Lotus Bowl Black

Code	Dim. (mm)	Capacity (Lt)
84112500	250x232x165	2,5

» Melamine Barrel Bowl

Code	Øxh (mm)	Capacity (Lt)
84034500	Ø 307x90	4,5
84038000	Ø 307x150	8

* Outer Bowl Dim.s : Ø 30x19,5 cm

Melamine Display Plates

» Melamine GN Display Plate

Code	Dim. (mm)	Model
58020101	530x325	GN 1/1
58020204	530x162	GN 2/4

» Melamine Rectangular Shallow Plate

Code	Dim. (cm)
58023620	36x20x4
58025027	50x27x5

» Melamine Plate

Code	Dim. (cm)
58022030	30,5
58020035	35,5

» Melamine Shallow Plate

Code	Dim. (cm)
58023434	34x34x5,5

» Bamboo/Melamine Display Set

Code	Dim. (cm)	Bowl Dim. (cm)
58020002	29x22x3,5	Ø 8,5x6
58020001	40x13x6	Ø 13x8,5
58020003	49,5x16x8,5	Ø 16x11

» Melamine Curved Plate

Code	Dim. (cm)
58023029	30x29x14

» Melamine Round Bowl

Code	Dim. (cm)
58021609	Ø 16x9
58022610	Ø 26x10
58023613	Ø 36x13

» Melamine Square Deep Plate

Code	Dim. (cm)
58021818	18x18x8,5
58022424	24x24x10
58023012	30x30x12

» Melamine Rectahgular Deep Plate

Code	Dim. (cm)
58023525	35x25x7
58024530	45x30x7

Melamine Display Plates

» GN 1/1 (530x325 mm)

Code	Depth (mm)
58001120	20
58001140	40
58001165	65
58011100	100

» GN 1/2 (325x265 mm)

Code	Depth (mm)
58001220	20
58001240	40
58001265	65
58012100	100

» GN 1/3 (325x176 mm)

Code	Depth (mm)
58001320	20
58001365	65
58013100	100

» GN 1/4 (265x162 mm)

Code	Depth (mm)
58001420	20
58001465	65
58014100	100

» GN 1/6 (176x162 mm)

Code	Depth (mm)
58001665	65
58016100	100

» GN 1/9 (176x108 mm)

Code	Depth (mm)
58001965	65

***Non-slip silicones on the bottom corners.**

Deep Bowl D/W

Code	Ø xh (cm)
58011208	12x8
58012010	20x10
58012513	25x13

Conical Bowl D/W

Code	Ø (cm)
58020030	29,5
58020034	34,5

Hammered Bowl

Code	Dim. (cm)
58013120	Ø 26,5x13,5

Boat Bowl

Code	Dim. (cm)
58015250	Ø 10,5x8,5
58015251	Ø 15,5x11,5
58015252	Ø 21x13,2

Bowl

Code	Dim. (cm)
58013124	Ø 14x6

- %100 wood view
- Unbacterialised
- Heat intensitive and endurance up to +85 and -40+85°C / -40°C
- Dishwasher safe
- Manufactured from elastic materials

Deep Bowl

Code	Ø (cm)
80011012	12,5
80011016	16
80011020	20
80011024	24

Square Deep Bowl

Code	Dim. (cm)
80010100	10x10x3,5
80010111	12,5x12.5x6
80010112	19,5x19,5x9,5
80010113	24x24x10,5
80010114	29x29x11
80010115	36x36x12

Triangle Deep Bowl

Code	Dim. (cm)
80011100	10x3,5
80011111	12x6
80011112	19,5x10
80011113	24x10,5
80011114	29X11
80011115	36x12

Eliptic Bowl

Code	Dim. (cm)
80012230	22x30x8
80013624	36x24x8,5
80012740	27x40x8,5

Round Bowl

Code	Dim. (cm)
80010015	Ø 16x4
80010020	Ø 21x5,5
80010025	Ø 26x7
80010030	Ø 30x8

» Leaf Display Tray

Code	Dim. (cm)
80010211	25x45x3
80010212	33x57x3

» Elite Tray

Code	Dim. (cm)
80010133	31x39
80010134	35x42

» Display Tray

Code	Dim. (cm)
80010208	9x35,5x4
80010209	23x46x5
80010210	33x55x5

Square Bowl

Code	Dim. (cm)
80012323	23x23x7
80012828	28x28x7,5

» Appetizer Pan

Code	Dim. (cm)
80012818	28x18,5x4
80013323	33x23x4
80013826	38x26x4

- Odorless
- Humid free
- Dishwasher safe
- Colour-fast
- Toxic free

» Partitioned Basket

Code	Dim. (cm)
57025232	52.5x32.5x8

» Oval Open Buffet Basket

Code	Dim. (cm)
57026144	61x44.5x14
57027257	72.5x57x14

» Long Display Basket

Code	Dim. (cm)
57022441	24x41x5x15

» Wide Display Basket

Code	Dim. (cm)
57024530	45x30x5x11,5
57026145	61x45x5x12

» Deep Basket

Code	Dim. (cm)
57024030	40x30x18
57026040	60x40x18

» Baguette Basket

Code	Dim. (cm)
57023328	33x28x45

» Baguette Basket (S/S)

Code	Dim. (cm)
40100131	Ø 27x31
40100132	Ø 27x40

» Bread Basket (S/S)

Code	Dim. (cm)
40101151	21x17x6
40101152	30x21x6
40101153	35x23,5x10
40101154	45x32x10

* Products are not plastic.

Table-Top

Slate Display Plates

» Slate Round Plate

Code	Ø (cm)
78002850	28,5

- Homogeneous heat distribution keeps foods warm
- For cold serving keep slates in fridge
- Dark colour, pattern and naturality of slate stone makes your presantations elegant
- You can polish your plates with olive oil easyly
- Non-stick, easy cleaning
- High-heat resisting
- Dishwasher safe
- Do not use on direct flame or in microwave

» Slate GN Plate

Code	Model	Dim. (mm)
78001100	GN 1/1	530x325
78001200	GN 1/2	265x325
78001300	GN 1/3	176x325
78011400	GN 1/4	65x162
78012400	GN 2/4	540x165

» Slate Rectangular Plate

Code	Dim. (cm)
78002010	20x10
78002512	25x12
78003011	30x11
78003016	30x16
78003020	30x20
78004030	40x30

» Slate Square Plate

Code	Dim. (mm)
78001515	150x150
78002020	200x200
78002525	250x250
78003030	300x300

» Slate Display Stand 2 Tiered

Code	h (cm)	Ø (cm)
78000002	23	20/25

» Slate Display Stand 3 Tiered

Code	h (cm)	Ø (cm)
78000003	33	20/25,5/30

Wooden Display Plates

» Bull Steak Display (Iroko)

Code	Dim. (cm)
69012637	26x37

» Display w/handle (Iroko)

Code	Dim. (cm)
69012043	20x43
69012547	25x47
69013242	32x42

» Classic Display (Iroko)

Code	Dim. (cm)
69012335	23x35
69012538	25,5x38,5

» Bull Steak Display (Beachwood)

Code	Dim. (cm)
69022637	26x37

» Display w/handle (Beachwood)

Code	Dim. (cm)
69022043	20x43
69022547	25x47
69023242	32x42

» Classic Display (Beachwood)

Code	Dim. (cm)
69022335	23x35
69022538	25,5x38,5

» Geometrical Display (Iroko)

Code	Dim. (cm)
69012038	20x38

» Cheese Display w/handle (Iroko)

Code	Dim. (cm)
69011547	15x47

» Classic Cheese Display (Iroko)

Code	Dim. (cm)
69011635	16x35

» Geometrical Display (Beachwood)

Code	Dim. (cm)
69112038	20x38

» Cheese Display w/handle (Beachwood)

Code	Dim. (cm)
69021547	15x47

» Classic Cheese Display (Beachwood)

Code	Dim. (cm)
69021635	16x35

» Pizza Display w/handle (Iroko)

Code	Ø (cm)
69010028	28

» Round Display (Iroko)

Code	Ø (cm)
69011028	28

» Elips Display (Iroko)

Code	Dim. (cm)
69012745	17x45

» Pizza Display w/handle (Beachwood)

Code	Ø (cm)
69020028	28

» Round Display (Beachwood)

Code	Ø (cm)
69021028	28

» Elips Display (Beachwood)

Code	Dim. (cm)
69022745	17x45

PC Flat Plate

Code	Ø (cm)
46040013	13
46040015	15
46040017	17
46040019	19
46040021	21
46040023	23
46040025	25
46040028	28

PC Soup Plate

Code	Ø (cm)
46030019	19
46030021	21

PC Oluklu Tabak

Code	Ø (cm)
46050017	17
46050018	18,5

PC Bowl

Code	Ø (cm)
46050012	12

PC Appetizer Plate

Code	Dim. (cm)
46020210	12
46020014	14
46020017	17
46020020	20

PC Shalow Platter

Code	Ø (cm)
46011114	14
46010024	24
46010029	29
46010034	34

» Rubber Wood (S/S Grinder)

Code	Model	Dim. (cm)
53011013	Salt Sprinkler	13
53012013	Pepper Mill	13
53011021	Pepper Mill	21
53011031	Pepper Mill	31
53011041	Pepper Mill	41
53011046	Pepper Mill	46

» Salt & Pepper Set

Code	Dim. (cm)
62010034	11

» Gondol Set

Code
35970000

» Pillar Set

Code	Dim. (cm)
53040720	8

» Ceramic Set

Code	Dim. (cm)	Model
53043122	Ø 6,5x7	Salt&Pepper
53040225	Ø 4,5x8	Toothpick

» PC Salt & Pepper Set

Code	Model
46010070	Salt Sprinkler
46010071	Pepper Sprinkler

» Leather Sleeved Sugar&Toothpick

Code	Dim. (cm)
53040558	Ø 5x7

» Parmesan Sprinkler

Code	Dim. (cm)
53048123	Ø 8x12

Condiment Sets

» Wooden Sauce Box

Code	Dim. (cm)
69011422	14x22
69011527	15x27

» Oil & Vinegar Stand

Code	Capacity
53033001	85 mlx2

» Oil & Vinegar Stand

Code	Capacity
53033002	100 mlx2

» Oil & Vinegar Stand

Code	Capacity
53052250	2x250 ml

» Oil & Vinegar Stand

Code	Capacity
53053250	3x250 ml

» Oil & Vinegar Stand

Code	Capacity
53054250	2x250 ml-2x150 ml

» Condiment Set

Code	Capacity
53033003	100 mlx2

» Jar Set

Code	Dim. (cm)
53053110	3x110 ml

» PC Sugar Bowl / Cruet

Code	Model	Dim. (cm)
46010004	Sugar Bowl	12
46010006	Cruet	

» Wooden Display Box

Code	Dim. (cm)
69001417	14x17

6900 Iroko **6901** Beachwood

» Wooden Deep Display Box

Code	Dim. (cm)
69002030	20x30

6900 Iroko **6901** Beachwood

» Toast Rack 6 Slices

Code	Dim. (cm)
56036127	15x7,5x11,5

» Copper Plated Display Bucket

Code	Dim. (cm)
56130009	9
56130012	12

» Display Basket

Code	Dim. (cm)
56031009	10,5x9

» Rectangular Display Basket

Code	Dim. (cm)
56032110	21x10x3,5

» Conical Snack Holder

Code	Dim. (cm)
60011001	18x10,4

» Mini Display Pan

Code	Dim. (cm)
56030014	14,5x9,5x4,5

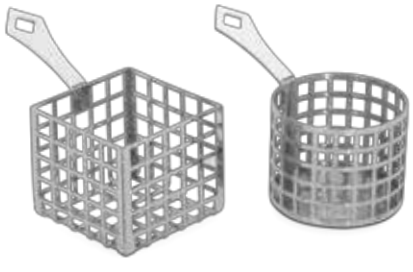

» Miniature French Fries Basket

Code	Dim. (cm)
40160501	7,5x7,5x6
40160502	Ø 7,5x6

Table Crumbler

Code
44010001

Bill Tray

Code	Dim. (cm)
56031617	18x13

Candle Holder

Code	Dim. (cm)
56016073	8,5x8,5x8,5
56016075	9x9x14

Napkin Holder

Code	Dim. (cm)	Model
56012111	15x3x10	Plaim
56011208	18,5x4,5x10,5	Perforated

Ceramic Ice Cream Cup

Code	Dim. (cm)
53040103	Ø 9x13,5

Ceramic Candle/Napkin Holder

Code	Dim. (cm)	Model
53040222	Ø 11,5x11,5	Candle Holder
53040226	Ø 17x9	Napkin Holder

Plate Cover

Code	Ø (cm)
56011270	27
56011300	30

Display Cover

Code	Ø (cm)
40335005	20,5
40335006	23
40335007	26

Gravy Boat

Code	Capacity (ml)
58010727	150
58010728	300

» Hammered Bowl

Code	Dim. (cm)
58013120	Ø 26,5x13,5

» Boat Bowl

Code	Dim. (cm)
58015250	Ø 10,5x8,5
58015251	Ø 15,5x11,5
58015252	Ø 21x13,2

» Bowl

Code	Dim. (cm)
58013124	Ø 14x6

» Ice Cream Cup

Code	Dim. (cm)
35201000	6,5
35202000	8
35203000	9
35204000	10

» Ice Cream Cup

Code	Dim. (cm)
35200001	8
35200002	8,5
35200003	9,5

» Perforated Bowl

Code	Dim. (cm)
57012110	Ø 17,5
57012111	Ø 20,5
57012112	Ø 22,5

» Ceramic Bowl

Code	Dim. (cm)
57011711	Ø 22x10

» Bread Basket (S/S)

Code	Dim. (cm)
40101151	21x17x6
40101152	30x21x6

» Bread/Fruit Basket (S/S)

Code	Dim. (cm)
57012210	Ø 20x10

» Round Rattan Basket

Code	Dim. (cm)
57022008	20,5x7,5
57022308	23x7,5
57022508	25x7,5

* Product is not plastic.

» Oval Rattan Basket

Code	Dim. (cm)
57022216	21.5x15x6
57022918	29x18x6

* Product is not plastic.

» Rectangular Basket

Code	Dim. (cm)
80011118	14,5x21x5
80011119	18,5x25,5x7

» Oval Basket

Code	Dim. (cm)
80011116	15x20x5
80011117	21x30x7,5

» Round Ashtray w/Cover

Code
35940000

» Square Ashtray w/Cover

Code
35930000

» Wind Protected Ashtray

Code	Model
43040011	Small
43040010	Big

» Casted Black Ashtray

Code	Model	Dim. (cm)
43040004	Square	8x8x3,5
43040005	Round	Ø 9,3x4

» Casted Ashtray

Code	Model	Dim. (cm)
40350013	Square	8x8x3,5
43040001	Round	Ø 9,3x4

» Casted Bronze Ashtray

Code	Model	Dim. (cm)
43040002	Square	8x8x3,5
43040003	Round	Ø 9,3x4

» Ashtray Stand

Code	h (cm)
40010004	76

» Outdoor Ashtray

Code	Dim. (cm)
48060002	40x99

Beverage

ugolini

- Designed to cool all non-carbonated drinks
- Easy to use and versatile
- w/ Stirring paddle
- Quick and easy cleaning
- Hermatic compresser
- Air cooled condenser
- Shockproof polycarbonate food grade bowls
- S/S structure

COMPACT 8/2

» Juice Cooler

Code	Capacity (lt)	Dim. (cm)
59040016	2x8	25x40x63

ugolini

- Designed to cool all types of drinks (Natural fruit juices, coffee and tea, almond milk etc.
- Easy to use and versatile
- w/ Fountain pump
- Quick and easy cleaning
- Hermatic compresser
- Air cooled condenser
- Shockproof polycarbonate food grade bowls
- S/S structure

DELUX

» Juice Cooler

Code	Capacity (lt)	Dim. (cm)
59040012	12	18x47x57
59040024	12x2	36x47x57

ugolini

- Designed for all natural fruit juices
- Designed to stir the juice even and perfect
- Easy to use and versatile
- w/ Stirring paddle
- w/Digital thermometer
- Quick and easy cleaning
- Hermatic compresser
- Air cooled condenser
- Shockproof polycarbonate food grade bowls
- S/S structure
- 220 V

A 19

» Cooler & Dispenser

Code	Capacity (lt)	Dim. (cm)
59040019	19	35x38x71,3

ugolini

- Designed to mix hot chocolate and all thick drinks
- Easy to use and versatile
- w/ Stirring paddle
- w/Double thermostate
- Quick and easy cleaning
- Shockproof polycarbonate food grade bowls
- S/S structure
- 220 V - 1300 Watt

Delice

» Hot Chocolate Dispenser

Code	Capacity (lt)	Dim. (cm)
59040005	5	26x32x49,5

ugolini

- Designed to make and dispense granitas & iced drinks
- Magnetic system stirrer
- Excl. patented magnetic transmission system
- Easy to use and versatile
- Quick and easy cleaning
- Hermatic compresser
- Air cooled condenser
- Shockproof polycarbonate food grade bowls
- S/S structure

Minigel

» Granita & Ice Slush Dispenser

Code	Capacity (lt)	Dim. (cm)
59040006	6	19,5x48x61,5

ugolini

- Designed to make and dispense granitas & iced drinks
- Magnetic system stirrer
- Excl. patented magnetic transmission system
- Easy to use and versatile
- Quick and easy cleaning
- Hermatic compresser
- Air cooled condenser
- Shockproof polycarbonate food grade bowls
- S/S structure

MT 2

» Ice Slush Dispenser

Code	Capacity (lt)	Dim. (cm)
59040020	2x10	36x47x69

» Orange Juicer

Code

41030002

» Orange/Pomegranate Juicer

Code

41030012

» Tea Maker

Code	Model	Capacity (lt)
41011040	40 Glasses	6
41011060	60 Glasses	7,5
41011090	80 Glasses	9
41011120	120 Glasses	12
41011160	160 Glasses	16
41011250	250 Glasses	22
41101450	450 Glasses	38

Made in Italy

» Blender (Square Jug)
Code
63010015

» Blender (Square Jug w/Sound Enclosure)
Code
63020015

Blender (Round Jug w/Sound Enclosure)
Code
63010041

» Blender Round Jug
Code
63010014

» Blender Square Jug
Code
63010040

» Blender
Code
63010013

» Citrus Juicer

Code	Model
63010016	w/o Lid
63010017	w/ Lid

» Beverage Mixer

Code

63010011

» Ice Crusher

Code

63010039

» Icer Crusher

Code

63010018

» Lux Juice Dispenser

Code	Lt
54012112	12

» Lux Coffee Dispenser

Code	Lt
54012212	12

* Can be use w/o wire stand

» Ice Tea Dispenser (Glass)

Code	Lt
59057900	7,9

» Premium Juice Dispenser

Code	Lt
54011112	12

» Premium Coffee Dispenser

Code	Lt
59011019	19

» Lux Milk Can

Code	Lt
54011212	6

» Modern Juice Dispenser

Code	Lt
74011112	12

» Modern Coffee Dispenser

Code	Lt
74011000	10

» Single Juice Dispenser

Code	Dim. (cm)	Lt
59039021	37x23x60	7

» Double Juice Dispenser

Code	Dim. (cm)	Lt
59039022	37x45x69	14

Beverage Server

» Beverage Server S/S Insulated

Code	Capacity (lt)
51019210	1,00
51019215	1,50
51019220	2,00

» Beverage Server S/S Insulated

Code	Capacity (lt)
51021310	1,00
51021315	1,50
51021320	2,00

» Water Jug

Code	Dim. (cm)
60011431	Ø 85x26

» PC Jug

Code	Capacity
60020018	1,8 Lt

» French Press

Code	ml
58060350	350
58060600	600

» Glass Mug

Code	ml
59050001	550

» Tea/Milk Pot

Code	Model	Capacity
55016202	Tea Pot	2 cc
55016204	Tea Pot	4 cc
55016215	Milk Pot	150 ml
62010150	Milk Pot	150 ml
62010350	Milk Pot	350 ml

» Acrylic Sugar Caddy /Mini Tea Bag Plate

Code	Model
40202250	Mini Tea Bag Plate
62030003	Acrylic Sugar Caddy

» Mug S/S

Code
36702052

460 461 462 463 464 465

» Glass

Code	ml	Pcs/Ctn
46010250	250	50
46010300	300	50
46010400	400	50

» Sandy Surface Glass

Code	ml	Pcs/Ctn
46011250	250	400
46011400	400	400

» Prisma/Shot Glass

Code	Model	ml
46013250	Prisma	250
46010060	Shot	60

Juice Glass

Whiskey Glass

» Juice/Whiskey Glass

Code	Model	ml	Pcs/Ctn
46010240	Juice	240	50
46012250	Whiskey	250	50

Goblet Glass

Cocktail Glass

» Goblet/Cocktail Glass

Code	Model	ml	Pcs/Ctn
46010295	Goblet	295	50
46010320	Cocktail	320	50

Wine Glass

Goblet Glass

» Wine/Goblet Glass

Code	Model	ml	Pcs/Ctn
46014250	Wine	250	50
46013400	Goblet	400	50

Beer Glass

Tulip Glass

» Beer/Tulip Glass

Code	Model	ml	Pcs/Ctn
46010500	Beer	500	24
46012400	Tulip	400	100

460 461

» Mug

Code	ml	Pcs/Ctn
46015250	250	50
46015300	300	50

» Mug

Code	ml
46010280	280

460 461 462 463

* Logo printing is possible for certain MOQ

Bar

» D/W Ice Bucket/Mini Punch Bowl

Code	Ø (cm)
60030020	20

* Double Wall

» Ice Bucket (D/W)

Code	Dim. (cm)
60016118	Ø15,5x16,5

» Big Ice Bucket (D/W)

Code	Dim. (cm)
60016119	Ø17x20,5

» Round Handled Ice Bucket

Code	Model	Ø (cm)
91000011	w/Lid	15,5
91000012	w/Lid-Plate	15,5

» Crescent Handled Ice Bucket

Code	Model	Ø (cm)
91000016	w/Lid	15,4
91000015	w/Lid-Plate	15,4

» Acrylic Ice Bucket

Code	Dim. (cm)
60010761	Ø16,5x15

» D/W Satin Bottle Cooler

Code	Dim. (cm)
60016106	Ø12x20

Champagne & Wine Buckets

» Champagne Bucket w/Handle

Code	Ø (cm)
60030019	19,5

» Champagne/Wine Bucket

Code	Dim. (cm)
36752221	Ø 21x22

» Champagne/Wine Bucket (Satin)

Code	Dim. (cm)
60016105	19x21

» Wine Bucket Table Stand

Code	Dim. (cm)
60010244	50x19x16

*w/o Bucket

» Bottle Stand

Code	Dim. (cm)
60016141	26x8x14

» Acrylic Champagne/Wine Bucket

Code	Dim. (cm)
60010760	Ø 22x20

» Champagne Bucket Stand

Code	Dim. (cm)
37752222	65

Melamine Barrel Punch Bowl

Code	Øxh (mm)	Capacity (Lt)
84034500	307x90	4,5
84038000	307x150	8

* Outer Dim. : Ø 30x19,5 cm

Punch Bowl

Code	Dim. (cm)
60010530	Ø 42x21

Lux Punch Bowl

Code	Ø (cm)
60030037	37,5

Mixing Glass

Code
60020008

Cocktail Shaker

Code	ml
60010350	300
60010500	500
60010750	750

Boston Shaker S/S

Code
60020007

* w/o Mixing Glass

Waiter's Corkscrew

Code
83010045

Winged Corkscrew

Code
83010046

Chalice Sweetener

Code
60020009

Napkin/Pipette Holder

Code
60020012

PC Bar Container

Code	Model
60020004	4 Compartment
60020005	5 Compartment
60020006	6 Compartment

Ice Crusher

Code
62040002

Ice Crusher (Mojito)

Code
62010031

Bar Spoon/Masher (Full Twist)

Code	Dim. (cm)
60010002	19
56036222	22

Jigger

Code	Dim. (cm)	Capacity
60016120	Ø 45x10	2/4 cc

Pourer S/S

Code
62010033

Bar Strainer

Code	Model
60016137	Small
62016137	Big

» Triple Nuts Display

Code	Dim. (cm)
39311000	6,5
39311001	8
39311002	9
40310013	10

» Partitioned Nuts Bowl

Code	Dim. (cm)	Model
80010195	10x17,5x2,5	2 Partitioned
80010196	10x26x2,7	3 Partitioned
80010197	10x33x2,5	4 Partitioned

» 2 Part. Rectangular Nuts Bowl

Code	Dim. (cm)
80010001	13x24x4

» 2 Partitioned Round Nuts Bowl

Code	Dim. (cm)
80010002	10x20x5,5

» 3 Partitioned Oval Nuts Bowl

Code	Dim. (cm)
80010003	16,5x24x4

» 3 Partitioned Round Nuts Bowl

Code	Dim. (cm)
80010004	25,5x25,5x3

» Fiber Non-slip Round Tray

Code	Ø (cm)
68210035	35,5
68210040	40,6
68210045	45

» Wooden Non-slip Round Tray

Code	Ø (cm)
68110033	33
68110038	38
68110043	43

» Wooden Round Tray

Code	Ø (cm)
68010033	33
68010038	38
68010043	43

» Fiber Non-slip Rectangular Tray

Code	Dim. (cm)
68213040	30x40
68213753	37x53
68214565	45x65
68215668	56x68

» Wooden Non-slip Rectangular Tray

Code	Dim. (cm)
68112738	27x38
68113244	32x44
68113646	36x46
68113753	37x53
68114361	43x61

» Ecoform Non-slip Rectangular Tray

Code	Dim. (cm)
68413753	37x53

» Textured Tray

Code	Dim. (cm)
46612736	27x36
46613244	32x44
46613646	36x46
46613753	37x53

» Wooden Rectangular Tray

Code	Dim. (cm)
68012738	27x38
68013244	32x44
68013646	36x46
68013753	37x53
68014361	43x61

» Ecoform Rectangular Tray

Code	Dim. (cm)
68313753	37x53

» Round Ashtray w/Cover

Code
35940000

» Square Ashtray w/Cover

Code
35930000

» Wind Protected Ashtray

Code	Model
43040011	Small
43040010	Big

» Casted Black Ashtray

Code	Model	Dim. (cm)
43040004	Square	8x8x3,5
43040005	Round	Ø 9,3x4

» Casted Ashtray

Code	Model	Dim. (cm)
40350013	Square	8x8x3,5
43040001	Round	Ø 9,3x4

» Casted Bronze Ashtray

Code	Model	Dim. (cm)
43040002	Square	8x8x3,5
43040003	Round	Ø 9,3x4

» Ashtray Stand

Code	h (cm)
40010004	76

» Outdoor Ashtray

Code	Dim. (cm)
48060002	40x99

lt7

Kitchen Appliances

SIRMAN
Made in Italy

- Highly effective patented cooling system.
- Sturdy and light weight fiberglass ABS body.
- Ergonomic handle.
- Rubber buffer between motor and shaft.
- High efficiency motors
- 3 controls available
  - one speed
  - drill like speed control
  - Variotronic: speed control with stabilizer
- Safety device preventing switching on by mistake
- Trigger switch for continuous blending
- 3 different motors
- IPX3 protection
- Quick coupling device.
- Shafts available in 2 length: 35 and 45 cm
- Completely demountable shafts for an accurate cleaning and a longer life
- Completely stainless steel shaft and bell
- Optional:
  - wall attachment
  - exposition shelf
  - whisk
- Whisk metal gearings
- Demountable and dishwashing safe whisk

Ventilated Motor

» Code	Model
63010042	Blender
63010023	Shaft 35 cm
63010008	Shaft 45 cm
63010009	Whisk
63010024	Wall Attachment

Blender
63010042

Whisk and Shaft

Wall Atachment
63010024

Power	750 W
Power Source	230 V/50 Hz
Knives Revolutions	r.p.m. 2000 - 11500
Working Capacity	300 Lt
Net Weight	3,9 Kg
Dimensions	A 125 mm, B 190 mm, C 390 mm

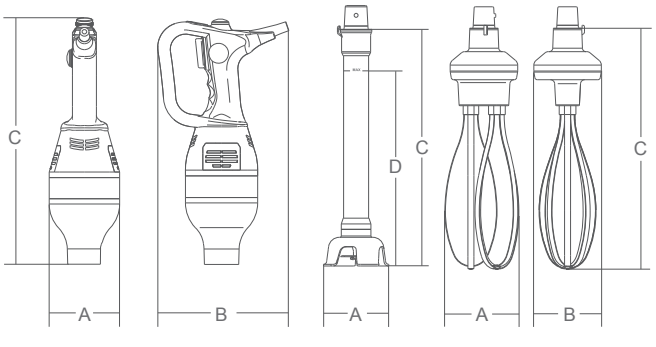

- Highly effective patented cooling system.
- Sturdy and light weight fiberglass ABS body.
- Ergonomic handle.
- Rubber buffer between motor and shaft.
- High efficiency motors
- 3 controls available
  - one speed
  - drill like speed control
  - Variotronic: speed control with stabilizer
- Safety device preventing switching on by mistake
- Trigger switch for continuous blending
- 3 different motors
- IPX3 protection
- Quick coupling device.
- Shafts available in 2 length: 35 and 45 cm
- Completely demountable shafts for an accurate cleaning and a longer life
- Completely stainless steel shaft and bell
- Optional:
  - wall attachment
  - exposition shelf
  - whisk
- Whisk metal gearings
- Demountable and dishwashing safe whisk

Ventilated Motor

Code	Model
63010006	Blender
63010023	Shaft 35 cm
63010008	Shaft 45 cm
63010009	Whisk
63010024	Wall Attachment

63010006

63010024

Power	550 W
Power Source	230 V/50 Hz
Knives Revolutions	r.p.m. 13.000
Working Capacity	200 Lt
Net Weight	3,5 Kg
Dimensions	A 125 mm, B 190 mm, C 385 mm

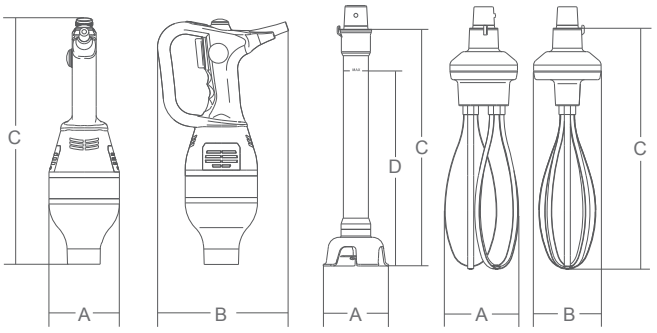

STROMAN

- Highly effective patented cooling system.
- Sturdy and light weight fiberglass ABS body.
- Ergonomic handle.
- Rubber buffer between motor and shaft.
- High efficiency motors
- 3 controls available
- one speed
- drill like speed control
- Variotronic: speed control with stabilizer
- Safety device preventing switching on by mistake
- Trigger switch for continuous blending
- 3 different motors
- IPX3 protection
- Quick coupling device.
- Shafts available in 2 length: 35 and 45 cm
- Completely demountable shafts for an accurate cleaning and a longer life
- Completely stainless steel shaft and bell
- Optional:
- wall attachment
- exposition shelf
- whisk
- Whisk metal gearings
- Demountable and dishwashing safe whisk

Ventilated Motor

Code	Model
63010043	Blender
63010044	Shaft 25 cm
63010045	Shaft 35 cm
63010046	Whisk
63010024	Wall Attachment

Blender
63010043

Whisk and Shaft

Wall Atachment
63010024

Power	360 W
Power Source	230 V/50 Hz
Knives Revolutions	r.p.m. 12.000
Working Capacity	70 Lt
Net Weight	2,5 Kg
Dimensions	A 100 mm, B 182 mm, C 348 mm

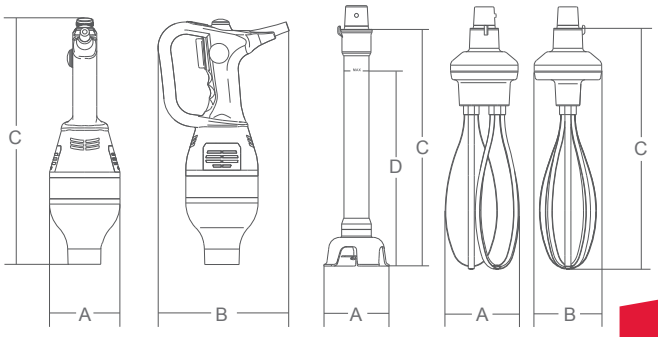

SIRMAN®
Made in Italy

- Aluminium alloy and S/S construction.
- Ventilated motor for continuous operation.
- Thanks to its compact design the machine is easy to install inside every kitchen.
- The exclusive feeding system makes easy to process also soft products like moz-zarella cheese.
- Safe operation is ensured by interlock switches on product pusher, lid and collect-ing tray.
- Version with dishwashing safe S/S lid available
- Large number of discs available for every purpose

Disc Holder

» Code	Model
63010001	Vegetable Cutter
63010002	Disc Holder

Power	515 W
Power Source	230-400 V
Disc Revolutions	r.p.m. 300
Net Weight	17,5 Kg

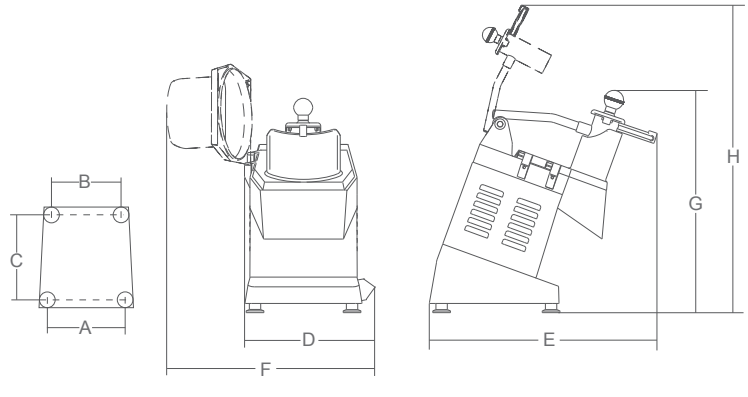

Dimensions

A	B	C	D	E	G	H
225 mm	195 mm	255 mm	280 mm	510 mm	510 mm	770 mm

Slicer Discs

Code	Cutting Thickness (mm)
DF14	14
DF10	10
DF8	8
DF3	3
DF4	4
DF1	1
DF2	2
DF5*	5

* DF5 is recommended for tomato slicing.

Jullien Slicer Discs

Code	Cutting Thickness (mm)
DQ10	10
DQ8	8
DQ6	6
DQ4	4

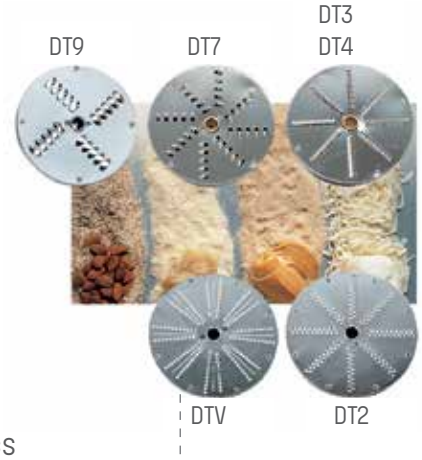

Grater and Granulator Discs

Code	Cutting Thickness (mm)
DT9	9
DT7	7
DT4	4
DT3	3
DT2	2
DTV	1

Dicer Discs

Code	Cutting Thickness (mm)
PS20	20
PS14	14
PS10	10
PS8	8

SIRMAN
Made in Italy

- Strong AISI 430 steel construction.
- Detached motor and bowl for a better thermal insulation.
- S/S bowl with handles and heavy bottom.
- High efficiency ventilated motor for continuous operation.
- Strong cutlery steel knives.
- Safe operations ensured by a system of micro switches on the lid.
- See-through lexan lid.
- Variotronic: speed control with stabilizer.
- Lid with opening to add ingredients during operation.
- Aavailable with steplessly variable-speed drive.

Ventilated Motor

Code	Model
63010004	Vegetable Cutter
63020004	Emulsifying Knife
63030004	Serrated Knife
63040004	Shaft w/knives for pesto sauce

* Incl/Standard blade

Standard knife

Emulsifying Knife
63020004

Serrated Knife
63030004

Shaft w/knives for pesto sauce
63040004

Power	350 W
Bowl Capacity	3,3 Lt
Bowl Filling Level	1,5 Lt
Revolutions	r.p.m. 2.800
Net Weight	10 Kg
Dimensions	A 160 mm, B 310 mm, C 305 mm, D 365 mm, E 255 mm

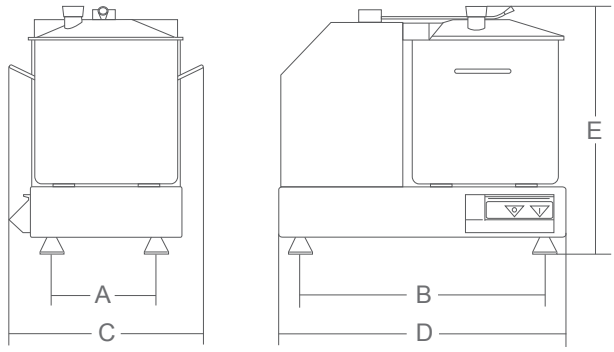

- Strong AISI 430 steel construction.
- Detached motor and bowl for a better thermal insulation.
- S/S bowl with handles and heavy bottom.
- High efficiency ventilated motor for continuous operation.
- Strong cutlery steel knives.
- Safe operations ensured by a system of micro switches on the lid.
- See-through lexan lid.
- Variotronic: speed control with stabilizer.
- Lid with opening to add ingredients during operation.
- Aavailable with steplessly variable-speed drive.

Ventilated Motor

Code	Model
63010005	Vegetable Cutter
63020005	Emulsifying Knife
63030005	Serrated Knife
63040005	Shaft w/knives for pesto sauce

* Incl/Standard blade

Standard knife

Emulsifying Knife
63020004

Serrated Knife
63030004

Shaft w/knives for pesto sauce
63040004

Power	350 W
Bowl Capacity	5,3 Lt
Bowl Filling Level	3,1 Lt
Revolutions	r.p.m. 1.500+2.800
Net Weight	11 Kg
Dimensions	A 160 mm, B 310 mm, C 305 mm, D 365 mm, E 320 mm

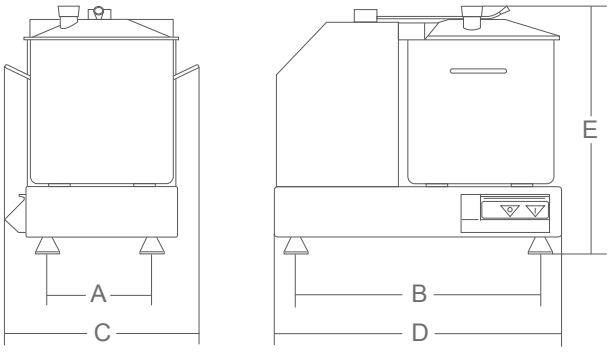

SIRMAN
Made in Italy

- Base-plate and reservoir in heat-resistant ABS
- Lid in polycarbonate with hole to add the ingredients during processing
- Interlocked lid and reservoir, easy to disassemble though for cleaning
- Motor brake
- Control with NVR 24 Volt IP 67

Included items:

- Hub with cutting knives in stainless steel
- Hub for ABS assembly
- Scoop

Optional

- Dismountable scraping blade

Ventilated Motor

Code	Model
63010003	Vegetable Cutter
63030006	Board Scrapper

* Knives included

Board Scrapper

Shaft w/knives to mix dough

Power	350 W
Bowl Capacity	3,3 Lt
Bowl Filling Level	1,5 Lt
Revolutions	r.p.m. 2.800
Net Weight	10 Kg
Dimensions	A 160 mm, B 310 mm, C 305 mm, D 365 mm, E 255 mm

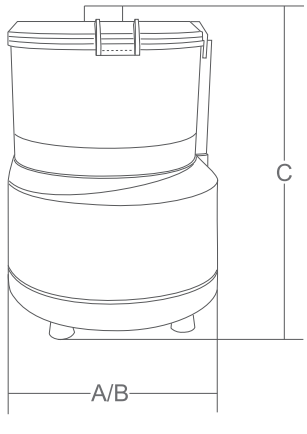

SIRMAN®
Made in Italy

Cheese Grater

- Strong machine, simple and compact, gives a high performance and power.
- It offers thr possibility of grating cheese and bread with uniformity and without any waste.
- Structure realised in polished aluminium, treated steel roller anti-corrosive.

Code	Model
63010021	Cheese Grater

Protection grater / Stainless steel drum

Microswitch on the grater

Power	588 W
Power Source	230 - 400 V/50-60 Hz F+N
Drum Revolutions	r.p.m. 1400
Mouth Dimensions	130 x 70
Net Weight	16 Kg

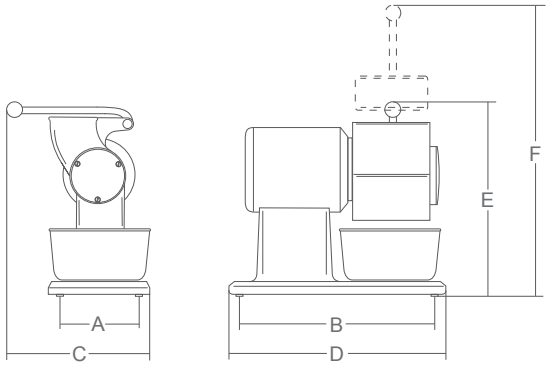

Dimensions	A	B	C	D	E	F
	185 mm	270 mm	290 mm	390 mm	370 mm	560 mm

KAPP

SIRMAN
Made in Italy

- Anodized cast aluminium alloy.
- Great distance between blade and motor for easy cleaning.
- Ventilated motor.
- Forged, hardened large thickness blades.
- Carriage running on self-lubricating bushes and lapped pins.
- Stainless steel screws and slice deflector.
- Strong thickness gauge support.
- Cast-in sharpener assembly.
- Compact dimensions and great cutting capacity.
- CE professional with device for releasing the carriage.
- Teflon coated or toothed blades are available on demand.
- 25° blade inclination.

250

Ventilated Motor

250

» Code	Model
63010250	Slicer 250

Blade	Ø 250 mm
Motor	147 W / 0,20 Hp
Cut Thickness	13 mm
Run of Carriage	245 mm
Hopper	230 x 230 mm
Cut Capacity	215 x 180

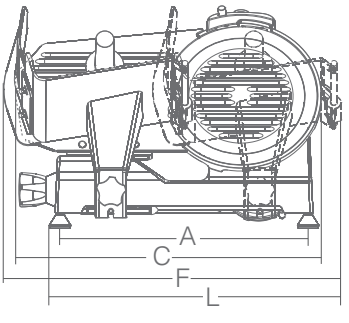

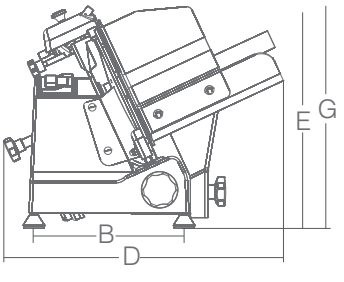

Dimensions

A	B	C	D	E	F	G	L
395 mm	245 mm	500 mm	560 mm	370 mm	570 mm	475 mm	490 mm

- Anodized cast aluminium alloy
- Great distance between blade and motor for easy cleaning
- Ventilated motor
- Forged, hardened large thickness blades
- Carriage running on self-lubricating bushes and lapped pins
- Stainless steel screws and slice deflector
- Strong thickness gauge support
- Cast-in sharpener assembly
- Compact dimensions and great cutting capacity
- CE professional with device for releasing the carriage
- Teflon coated or toothed blades are available on demand
- 25° blade inclination

250

Ventilated Motor

» Code	Model
63010026	Slicer 250

Blade	Ø 250 mm
Motor	147 W / 0,20 Hp
Cut Thickness	13 mm
Run of Carriage	245 mm
Hopper	230 x 230 mm
Net Weight	215 x 180

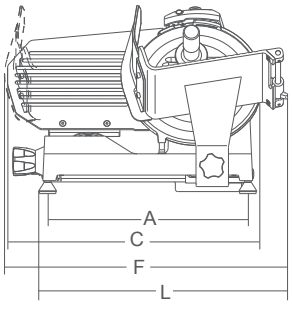

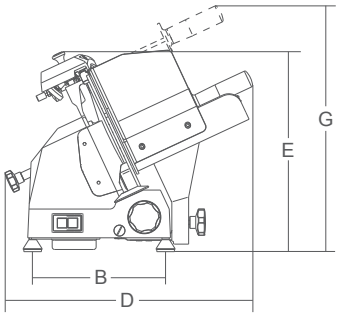

Dimensions

A	B	C	D	E	F	G
395 mm	245 mm	500 mm	560 mm	370 mm	570 mm	475 mm

SIRMAN
Made in Italy

- Anodized cast aluminium alloy.
- Great distance between blade and motor for easy cleaning.
- Ventilated motor.
- Forged, hardened large thickness blades.
- Carriage running on self-lubricating bushes and lapped pins.
- Stainless steel screws and slice deflector.
- Strong thickness gauge support.
- Cast-in sharpener assembly.
- Compact dimensions and great cutting capacity.
- CE professional with device for releasing the carriage.
- Teflon coated or toothed blades are available on demand.
- 25° blade inclination.

Ventilated Motor

300

» Code	Model
63010300	Slicer 300

Device for releasing tre carriage

More space between blade and body machine

Enclosed and sealed belt pulley standard

Blade	Ø 300 mm
Motor	210 W
Cut Thickness	13 mm
Run of Carriage	285 mm
Hopper	250x275 mm
Net Weight	20,5 Kg

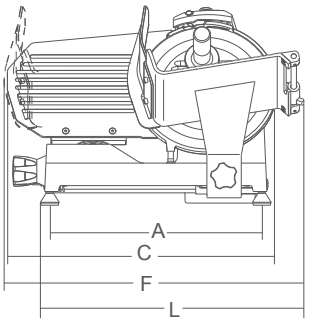

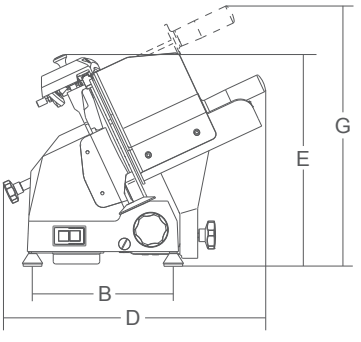

Dimensions

A	B	C	D	E	F	G	L
435 mm	295 mm	600 mm	610 mm	420 mm	640 mm	510 mm	535 mm

- Rounded design, no sharp edges and visibile screws.
- Chrome plated and ground slide rod.
- Lapped cast iron slide rod bushing.
- Vulcanized rubber stops on carriage.
- Removable support cover for thickness gauge plate.
- Stainless steel slice deflector with bayonet fitting.
- Stainless steel screws and fittings.
- Enclosed and sealed belt pulley.
- 49,5 mm distance between blade and motor.
- Bottom cover.
- Changeover electronic circuit 110-220-380 V single and three phase.
- Built in sharpening tool with bottom protection.
- Standard blade removal tool.
- 35° blade inclination
- Plastic knob.
- Plastic pushbuttons with IP67 protection rating.

350

Ventilated Motor

» Code	Model
63010350	Slicer 350

Large hopper

More space between blade and body machine

Blade	Ø 350 mm
Motor	370 W
Cut Thickness	23 mm
Run of Carriage	310 mm
Hopper	305x270 mm
Net Weight	46 Kg

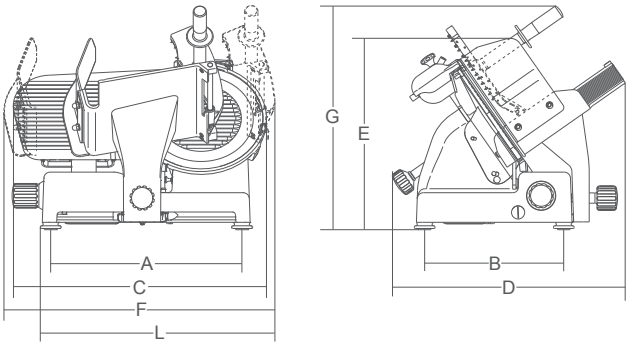

Dimensions	A	B	C	D	E	F	G	L
	465 mm	340 mm	660 mm	575 mm	455 mm	710 mm	530 mm	590 mm

- Innovative rounded design and no sharp edges or visible screws
- Chrome plated ground and lapped slide rod
- Lapped cast iron slide rod bushing
- Vulcanised rubber stops on carriage
- Removable support cover for thickness gauge plate
- Stainless steel slice deflector with snap-on bayonet fitting
- Stainless steel screws and fittings
- Bottom cover for accessing electrical Components
- Built-in sharpening tool with bottom protection
- Easy to remove grease guard mounted along the thickness gauge plate
- Standard blade removal tool
- Plastic knobs
- Rubber feet
- Plastic pushbuttons with IP67 protection rating

Vertical

Ventilated Motor

Code	Model
63010027	Vertical Slicer

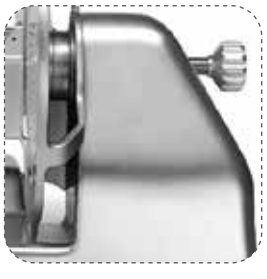

Blade	Ø 350 mm
Motor	370 W / 0,50 Hp
Cut Thickness	29 mm
Run of Carriage	310 mm
Hopper	300 x 270 mm
Net Weight	215 x 180
Dimensions	

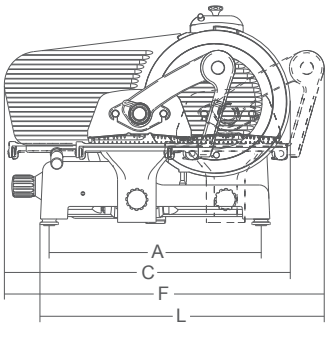

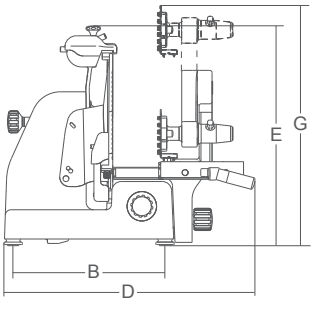

A	B	C	D	E	F	G	L
468 mm	338 mm	660 mm	600 mm	530 mm	750 mm	715 mm	630 mm

SIRMAN
Made in Italy

- Metal cast planetary mixer
- Liftable head for bowl and tools removal and easy claening
- Removable, S/S, 7L bowl
- 3 metal tools
- D.C. motor with speed control
- Gear drive and grease lubrication
- Safety microswitch on the head
- NVR device
- Suitable for medium density mix (for ex. Bread dough, about 1 kg of flour)
- NOT suitable for tough mix

Minneapolis

7 Lt

Code	Model
63010007	Planet Mikser 7 Lt

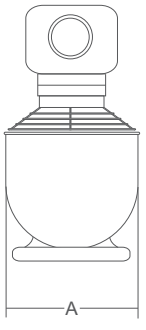

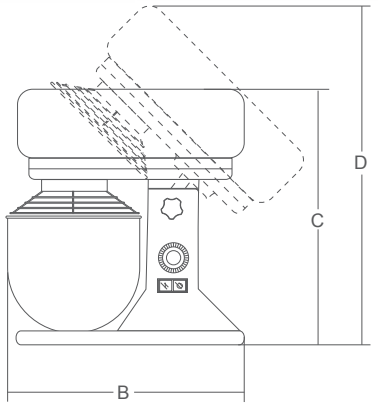

Power	280 W
Power Source	230 V/50 Hz
Whisk Revolutions	g./75+660
Bowl Capacity	7 Lt
Net Weight	18 Kg
Dimensions	A 240 mm, B 410 mm, C 425 mm, D 540 mm

- Machine body made from large thickness powder coated steel
- Bowl protection made from metal wire
- Easy to remove bowl made from stainless steel 304
- Safety microswitches for the lid and the bowl
- 3 easy to remove metal tools: aluminium spatula and hook, steel and aluminium whisk
- 3 speed gear
- Steel gear box
- Ventilated motor

10 Lt

Minneapolis®

» Code	Model
63010010	Planet Mikser 10 Lt

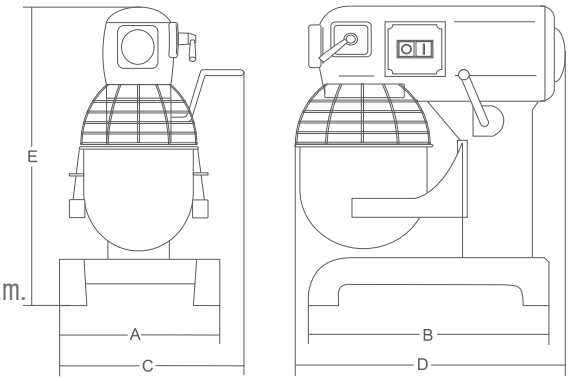

Power	450 W
Power Source	230 V/50 Hz
Whisk Revolutions	108/195/355 r.p.m.
Bowl Capacity	10 Lt
Net Weight	74 Kg
Dimensions	A 360 mm, B 345 mm, C 440 mm, D 500 mm, E 630 mm

SIRMAN
Made in Italy

- Simple and sturdy machine: safe and easy to use
- Table-top model; cast anodizedaluminium alloy contruction, polished, hygienic and rustproof
- Cutting table, meat pusher and meat pusher in stainless steel AISI 304
- 24V controls with safety codified microswitches on the door and motor brake (according to new CE safety rules)
- Maximum blade adhesion to the pulley, thanks to the semi-curved shape of the pulleys and ideal adjustment
- Watertight bearings on upper pulley
- Easy cleaning thanks to 2 special manufacturing details:
  1) all the electrical parts are located below the cutting table (IP X5 waterprotected);
  2) by simply unscrewing two knobs, you can remove the blade, upper pulley and its support
- Powerful asynchronous and ventilated 4-pole motors protected by sealing oil ring
- 16 mm wide tempered ring-blades useful for cutting bones or meat (frozen or fresh)

» Code	Model
63010048	Bone Saw

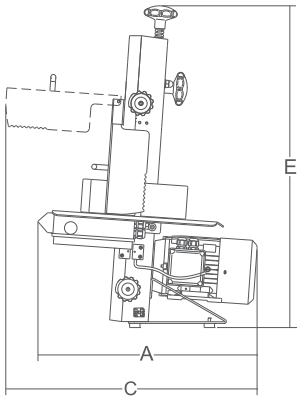

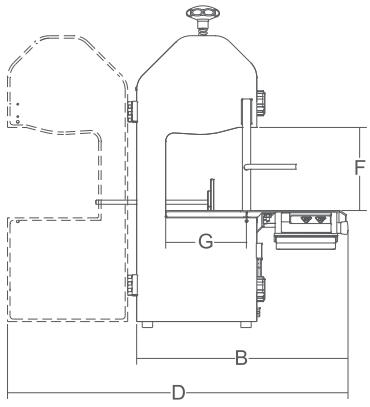

Blade Length	1840 mm
Motor	1100 W / Hp 1,5
Pulley	250 mm
Net Weight	40 Kg

Dimensions

A	B	C	D	E	F	G
530 mm	600 mm	640 mm	950 mm	915 mm	250 mm	240 mm

- Simple and sturdy machine: safe and easy to use
- Table-top model; cast anodizedaluminium alloy contruction, polished, hygienic and rustproof
- Cutting table, meat pusher and meat pusher in stainless steel AISI 304
- 24V controls with safety codified microswitches on the door and motor brake (according to new CE safety rules)
- Maximum blade adhesion to the pulley, thanks to the semi-curved shape of the pulleys and ideal adjustment
- Watertight bearings on upper pulley
- Easy cleaning thanks to 2 special manufacturing details:
  1) all the electrical parts are located below the cutting table (IP X5 waterprotected);
  2) by simply unscrewing two knobs, you can remove the blade, upper pulley and its support
- Powerful asynchronous and ventilated 4-pole motors protected by sealing oil ring
- 16 mm wide tempered ring-blades useful for cutting bones or meat (frozen or fresh)

» **Code**
63010028

Model
Bone Saw

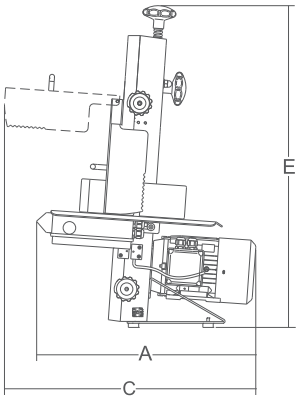

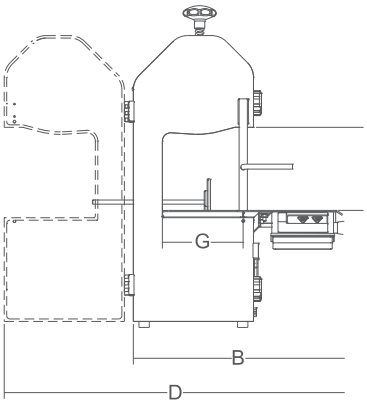

Blade Length	1550 mm
Motor	1 ph-Hp 1/r.p.m. 1400 3 ph-Hp 1,5/r.p.m. 1400
Pulley	210 mm
Net Weight	32 Kg

Dimensions

A	B	C	D	E	F	G
530 mm	510 mm	606 mm	822 mm	778 mm	215 mm	195 mm

- A compact and fast machine for small sized products, ideal combined with low temperature cooking instruments like the Softcooker
- Easily settable vacuum and sealing time
- Easily removable sealing bar
- Bush suction pump
- Display of vacuum percentage and time to countdown
- Last setting can be saved in memory
- Rev counter and pump meter
- Pump preheating and oil cleaning cycle
- Change oil message
- Timed external vacuum
- Manual cover lift

Power	0,1 kw
Power Source	230 V/50 Hz
Vacuum Pump	mc/h 4
Net Weight	30 Kg
Dimensions	320x560x257 mm

» Code	Model
63010030	Vacuum Packaging Machine

- "Easy" identifies a simplified control board that provides all the main functions necessary for a complete professional use
- All the other technical and functional specifications of the machine are the same as in the amplified version
- Easy vacuum and sealing time setting
- Display of vacuum percentage and time to countdown
- Last setting saved in memory
- Rev counter and pump meter
- Pump preheating and oil cleaning cycle
- Oil change message
- Timed external vacuum
- Not available with printer or Gas
- Large injection bells
- Automatic cover lift operated by pneumatic pistons
- Easily removable sealing bar

Power	0,45 Kw
Power Source	230 V/50 Hz
Vacuum Pump	mc/h 12
Net Weight	54 Kg
Dimensions	493x585x370 mm

» Code	Model
63010035	Vacuum Packaging Machine

MENU
SOFT
SIRMAN

SIRMAN®
Made in Italy

- High precision warmer with temperature control
- Working temperature display
- 5 storable programs
- IP X3 protection rated stainless steel structure
- Can be applied to the pot by means of a clamp.(max depth 16,5 cm)
- Best performances up to 50/80 lt
- Protection device switches off the warmer in case of accidental use outside the liquid
- Circulating pump to help the best product mixing
- Temperature sensor to prevent overload and overheating
- A convenient stainless steel handle makes it easy to carry

» Code	Model
63010051	Softcooker

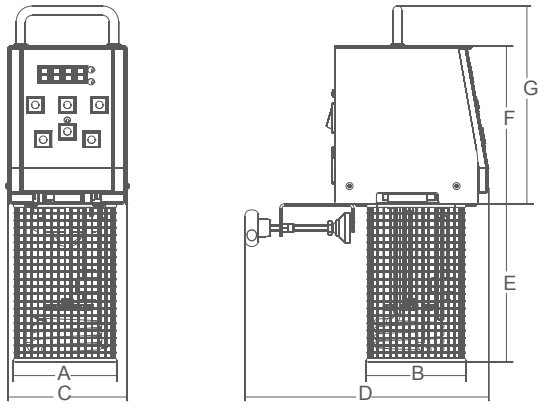

Power	2000 Watt
Power Source	230 V/50 Hz
Temperature	°C 40 / 115
Net Weight	4,5 Kg

Dimensions	A	B	C	D	E	E	G
	110 mm	105 mm	130 mm	260 mm	170 mm	170 mm	210 mm

- Stainless steel structure and 1/1 GN made of stainless steel
- Practical handles to carry it easily
- Powerful shock-proof coated heating elements in contact with tank bottom
- Electronic control system of the temperature with working temperature display
- Same control system of Softcooker with delta T of 0,2°C
- 5 storable programs
- Temperature setting in C° and F°
- Equipped with lid

Code	Model
63010049	Softcooker GN 1/1

Power	1150 Watt
Power Source	230 V/50 Hz
Temperature	°C 40 / 115
Net Weight	5 Kg
Dimensions	X 110 mm, Y 105 mm, H 130 mm

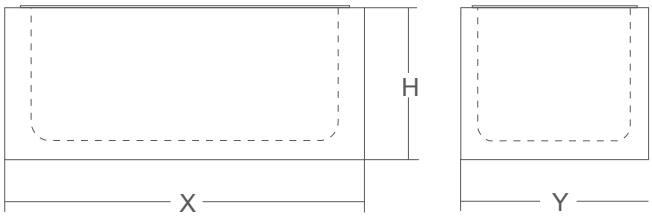

SIRMAN®
Made in Italy

- Stainless steel construction
- Tempered glass rotating plate
- Timer 30 min.
- Microwave: 6 different power levels
- 2 grill-microwave combination
- Weight-based automatic defrost
- Ideal for small restaurants and bars

Required Power	1400 W m.o./1000 W grill
Power Source	230 V/50 Hz
Power Level	n. 5
Microwave Frequency	MHz 2450
Inside Volume	25 Lt
Net Weight	14,5 Kg
Dimensions	483x422x281 mm

Minneapolis®

» Code
63010055

Model
Microwave Oven

- High versatility with 5 power levels
- Manual controls for power and timer
- Stainless steel cabinet and cavity finish
- Ceramic glass cooking plate
- See-through opening door with practical handle
- 25 lt inside volume
- Inner dimensions 330x360x200 mm

Minneapolis®

Required Power	1500 W
Power Source	230 V/50 Hz
Power Level	n. 6
Microwave Frequency	MHz 2450
Inside Volume	25 Lt
Net Weight	17,7 Kg
Dimensions	520x442x312 mm

» Code
63010054

Model
Microwave Oven

- Stainless steel construction including chamber
- Distance between shelves cm 8
- Seamless, round-cornered and easy to clean chamber to prevent contamination
- Double glass stainless steel door
- Effective 2 lamp chamber lighting
- Thermostatically controlled temperature from 25°C to 300°C (77°F to 572°F)
- Choice of 0' to 120' programmable timer or continuous operation
- Ideal forars and Restaurants
- Inner dimensions 480x360x300 mm

» Code	Model
63010060	Convection Oven

Power	2600 W
Power Source	230 V/50 Hz
Temperature	25 / 300°C
Number of Shelves	4
Tray Dimensions	440x330 mm
Inner Dimensions	480x360x300 mm
Net Weight	35 Kg
Dimensions	750x1000x850 mm

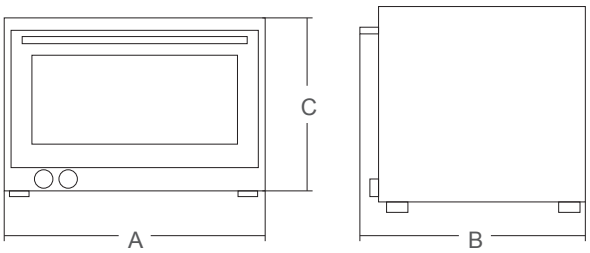

SIRMAN
Made in Italy

- Made from AISI 316 S/S with AISI 304 S/S conveyor belt
- Thermal insulation of the chamber
- SEF-ventilated motor
- Fan cooled controls compartment
- The heating elements covered by quarts tubes can be switched on independently
- Variable speed drive (VV versions)
- Loading and unloading chutes
- Easy to remove crumb pan

Power	2660 W
Power Source	230 V/50-60 Hz F+N
Width of Gridiron	220 x 330
Net Weight	16 Kg
Dimensions	370x480x340 mm

» Code
63010037

Model
Conveyor Toaster

- AISI 304 stainless steel construction including conveyor
- Fan-cooled motor
- Built-in cooling-fan to prevent overheating and burns
- Reinforced heating elements against burnout and breakage
- Reflecting heating elements for upper and lower heat ensure that the product is quickly and evenly heated
- Upper and lower elements can be selected for perfect golden toasting every time
- Easy to load rack with rear or front discharge

Power	1300 W
Power Source	230 V/50 Hz F+N
Width of Gridiron	185x300
Net Weight	12 Kg
Dimensions	238x330x349 mm

» Code
63010038

Model
Conveyor Toaster

- AISI 304 stainless steel construction
- Powerful IP 55 insulated and fan-cooled motors for continuous use
- Endless screw motor-reducer running in an oil-bath enables a long service life
- Motor-reducer equipped with a double seal for long, trouble-free service
- Convenient head interlock mechanism (CE versions)
- Stainless steel mincing head carefully designed for high yeld production
- Feed tray designed with square neck for outstanding performance
- Feed tray provided with safety interlock (CE versions)
- Stainless steel IP 67 protected controls with reverse.

» Code	Model
63010070	Meat Grinder

Power	1ph W 1100/Hp 1,5 - 3ph W 1472/Hp 2
Power Source	230-400 V/50Hz
Standart Plate	ø mm 4,5
Output/h.	350 kg/h
Net Weight	36 Kg
Dimensions	512x390x531 mm

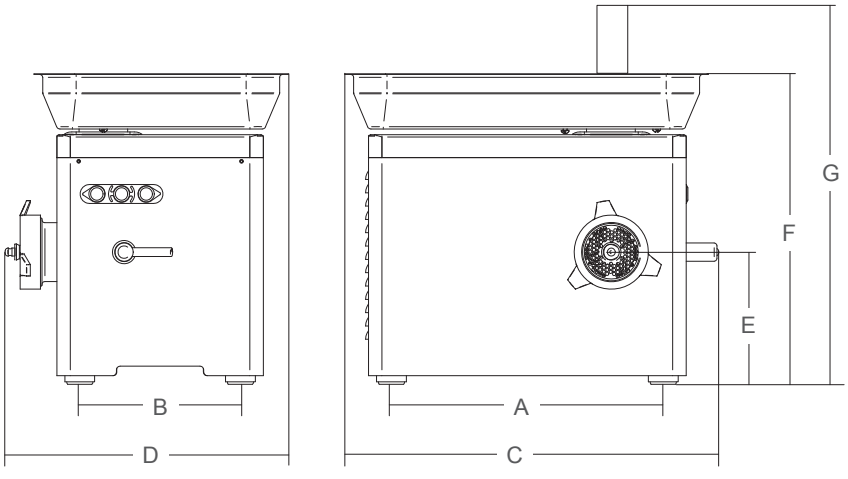

SIRMAN®
Made in Italy

Power	2500 W
Power Source	230 V/50-60 Hz F+N
Useful Surface	322x270 mm
Net Weight	7,5 Kg
Dimensions	A 320 mm, B 440 mm, C 115 mm

Code	Model
63010080	Built-In Induction Cooker

Power	2500 W
Power Source	230 V/50-60 Hz F+N
Useful Surface	322x270 mm
Net Weight	9 Kg
Dimensions	A 320 mm, B 500 mm, C 115 mm

Code	Model
63010081	Induction Cooker

Code	Model
63010082	Induction Cooker

Power	3500 W
Power Source	230 V/50-60 Hz F+N
Useful Surface	330x275 mm
Net Weight	11 Kg
Dimensions	A 340 mm, B 460 mm, C 135 mm

Minneapolis

Power	3500 W
Power Source	230 V/50-60 Hz F+N
Useful Surface	280 x 280 mm
Net Weight	5 Kg
Dimensions	A 330 mm, B 425 mm, C 105 mm

- The induction hobs are easy to install on every working surface in kitchens, restaurants or dining rooms; thanks to the absence of fumes they are perfect for public cooking performances or when the preparation is made in view of customers
- Graduated digital controls
- Extremely easy to use and to clean
- Smooth cooking surface makes cleaning easy
- Safe operations are ensured by the cooking surface which is never heating up
- Induction hobs are energy saving thanks to heating efficiency and no need to heat up
- Electric absorption is stopped when the pan is removed from the hob surface

» Code	Model
63010019	Induction Cooker
63010020	Induction Wok Cooker

Minneapolis

Power	3500 W
Power Source	230 V/50-60 Hz F+N
Useful Surface	Ø 280 mm
Net Weight	7,3 Kg
Dimensions	A 340 mm, B 445 mm, C 110 mm

WOK

SIRMAN
Made in Italy

- Bain - marie alternative for maintaining the temperature of trays and casserole dishes made of metal, glass and porcelain
- Hot Plate conveniently designed for buffet and table service
- Sturdy polished stainless steel frame
- Convenient handles to easily carry it
- Dial temperature control up to 90 °C (194 °F)
- Gastronorm 1/1 tempered glass

Power	230 Watt
Power Source	230 V/50 Hz
Temperature	°C 0 / 90
Useful Surface	530 x 325 mm
Net Weight	4,5 Kg
Dimensions	A 610 mm, B 370 mm, C 45 mm

» **Code** 63010053

Model Buffet Plate

- Sturdy and compact structure
- Made from AISI 340 stainless steel
- Shock-proof heating elements
- Temperature adjustable by means of a thermostat ranging from 0 to 60°C
- Pilot light

» **Code** 63010052

Model Pizza Warmer

Power	430 Watt
Power Source	230 V/50-60 Hz F+N
Temperature	°C 0 / 60
Net Weight	13,4 Kg
Dimensions	A 500 mm, B 500 mm, C 90 mm

SIRMAN
CE

SIRMAN
Made in Italy

- 20 pre-set programs, of which 4 can be linked to 4 keys on the keypad and the other16 can be recalled through the menu (all can be reprogrammed)
- 9 programs set in self-learning mode
- Display to view the programs and machine operation
- Transparent silencing bell available on request
- The square glass has been developed to ideally work with large quantities of ice, even dry
- 2 litre capacity, built out of transparent, indestructible Tritan, can be washed in dishwasher, graduated in litres, UK and U.S. gallons
- Glass lid in rubber with airtight seal with cap and graduated glass
- Knife support in stainless steel that can be fully and easily disassembled from the glass body. Knife with 4 spokes obtained from a single mould in tempered cutlery steel, easy to disassemble
- Handy and practical: you can pour the product in 3 different directions
- Perfect to prepare frozen drinks or smoothies with syrups and concentrates
- Multi-point motor puller in stainless steel

Ventilated Motor

» Code	Model
63010015	Blender (Square Jug)
63020015	Blender (Square Jug w/Sound Enclosre)
63010041	Blender (Round Jug w/Sound Enclosre)

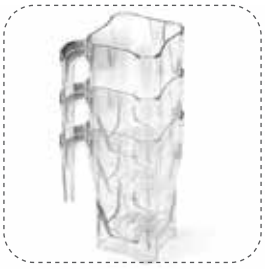

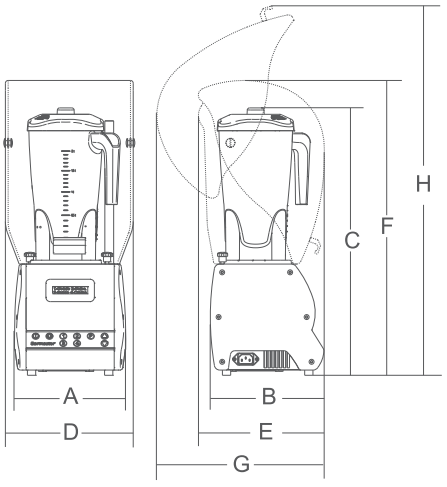

Power	750 W - Hp 1
Power Source	230 V/50-60 Hz F+N
Motor	r.p.m. 14.000+24.000
Jug Capacity	2 Lt
Net Weight	5 Kg

Dimensions	A	B	C	D	E	F	G	H
	200 mm	200 mm	485 mm	240 mm	230 mm	535 mm	315 mm	670 mm

- Professional mixer designed to cater to the specific requirements of bars, restaurants, cafeterias, etc.
- Machine structure in extruded aluminium and sides in ABS with 1 or 2 glasses for the aluminium version and machine structure in stainless steel for the stainless steel version
- Powerful motor with forced ventilation, for prolonged use and enhanced durability
- Reliable low-noise transmission system in vulcanized rubber
- Magnetic safety micro-switch on glass lid without forced position
- On-off pulse controls with speed variator (standard feature).
- 2 litre capacity, built out of transparent, indestructible Tritan, can be washed in dishwasher, graduated in litres, UK and U.S. gallons, or 2 litre and 5 litre glass in stainless steel for the Five version
- Glass lid in rubber or polyester for Orion Five, both with airtight seal with cap and graduated glass
- Knife support in stainless steel that can be fully and easily disassembled from the glass body
- Knife with 4 spokes obtained from a single mould in tempered cutlery steel, easy to disassemble

Ventilated Motor

» Code	Model
63010014	Blender (Round Jug)
63010040	Blender (Square Jug)

Vulcanized rubber gears

Milkshake application

Power	750 W - Hp 1
Power Source	230 V/50-60 Hz F+N
Motor	r.p.m. 14.000+24.000
Jug Capacity	2 Lt
Net Weight	5 Kg
Dimensions	A 200 mm, B 200 mm, C 470 mm

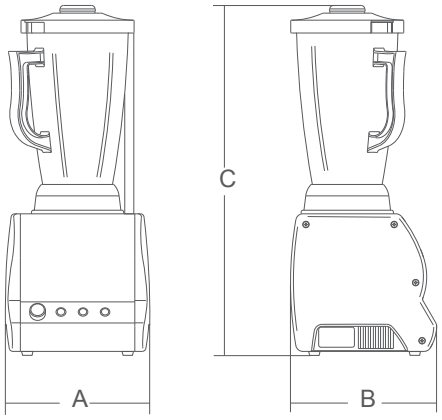

SIRMAN
Made in Italy

- Designed to meet the specific needs of the modern bar, it is particularly suitable for preparing smoothies, fruit and vegetables drinks
- White or chrome body, no edges or seams for easy cleaning
- Powerful ventilated motor
- Transparent, unbreakable 1,5 lt Tritan container is dishwasher safe and graduated with litres and UK/USA gallons
- Tight rubber lid with feed opening to add ingredients while the blender is working
- Vulcanized rubber gears drive gives a high power transmission and quiet operation
- 4-blades stainless steel knife can be easily disassembled
- Safety microswitch on the lid
- Speed control on request

Power	450 W - Hp 0,60
Power Source	230 V 50/60 Hz F+N
Motor	r.p.m. 18.000
Jug Capacity	0,55 Lt
Net Weight	3 Kg
Dimensions	213x200x416 mm

Ventilated Motor

» Code	Model
63010013	Blender

- A complete line of drink mixers with a modern soft design. Designed to commercial use, they meet all European and North-American safety requirements
- White or chrome head, aluminium stem and die casting base for a perfect stability, no edges or seams for easier cleaning
- Countertop (1 or 2 cups) or wall unit versions available
- Transparent 550 cc Tritan cup or stainless steel cup on request
- 900 cc stainless steel cup on 120 W version
- Powerful ventilated motor for a longer life
- Spindle with three aluminium and s/steel agitators for preparing cocktails and drinks, or with a special round agitator for frozen coffees or for creamier results
- Safety microswitch on the cup support (optional for non UE countries)
- Speed control on request

Power	100 W
Power Source	230 V 50/60 Hz F+N
Motor	r.p.m. 14.000
Jug Capacity	0,55 Lt
Net Weight	2,5 Kg
Dimensions	150x195x485 mm

» Code	Model
63010011	Beverage Mixer

- Commercial easy to use citrus juicer with round design
- Chrome body, no edges or seams for easy cleaning
- Stainless steel bowl is removable for cleaning and is dishwasher safe, ABS bowl available on request
- Reamer and sieve are one piece to squeeze with the maximum efficiency
- Aluminium stainless steel lever to avoid any food contact is available on request
- Patented safety microswitch on the cone allows to activate the juicer when the product is pushed down
- The juicer is available without microswitch as well
- Speed control on request

Power	150 W
Power Source	230 V /50-60 Hz F+N
Revolutions/min.	r.p.m. 320
Net Weight	3 Kg
Dimensions	210x210x280 mm

» Code	Model
63010016	Citrus Juicer

» Code	Model
63010017	Citrus Juicer w/Lever

- Commercial easy to use citrus juicer with round design
- Chrome body, no edges or seams for easy cleaning
- Stainless steel bowl is removable for cleaning and is dishwasher safe, ABS bowl available on request
- Reamer and sieve are one piece to squeeze with the maximum efficiency
- Aluminium stainless steel lever to avoid any food contact is available on request
- Patented safety microswitch on the cone allows to activate the juicer when the product is pushed down
- The juicer is available without microswitch as well
- Speed control on request

Power	150 W
Power Source	230 V /50-60 Hz F+N
Revolutions/min.	r.p.m. 320
Net Weight	3,5 Kg
Dimensions	210x210x280 mm

SIRMAN®
Made in Italy

- Professional ice crusher, an indispensable bar tool for preparing drinks and frozen cocktails and in the restaurant for displaying fish or fresh foods
- Crushes any ice cubes made with an ice cube machine up to 40x40mm at -3° C
- Its discharge adjustment lets you regulate the average size of the crushed ice
- Extruded aluminium body, stainless steel container, food-grade ABS opening and s/steel blades
- Ventilated motor with gear transmission for prolonged use, micro-switch on the lid for maximum operator safety

» Code	Model
63010039	Ice Crusher

Power	150 W
Power Source	230 V 50/60 Hz F+N
Blade Speed	r.p.m. 800
Jug Capacity	3 Lt
Net Weight	5,2 Kg
Dimensions	A 205 mm, B 285 mm, C 491 mm, D 235 mm

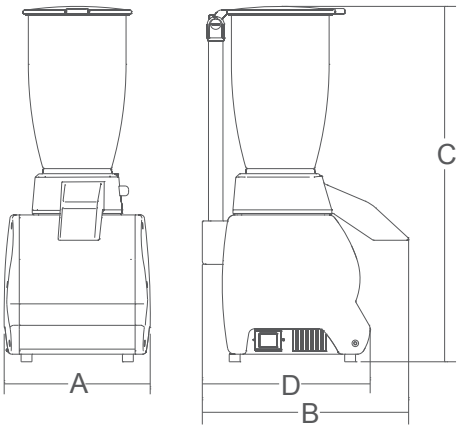

- Triton allows to crush ice in different sizes by adjusting the blade:
  - Finely crushed ice for the traditional Italian granitas
  - Flakes for frozen cocktails or to serve or display cold dishes
- Safety microswitch on the feeding mouth
- Safety microswitch on the collecting tray
- Polished aluminium feeding mouth
- Stainless steel parts and details
- Aluminium and stainless steel internal structure
- Body and tray are made from thermoformed alimentary plastic
- Ribbed belt for low power absorption.

Code	Model
63010018	Ice Crusher

Cut thickness adjusting knob

Collecting tray with microswitch

Microswitch on the lever

Power	350 W
Power Source	230 V/50-60 Hz F+N
Motor	r.p.m. 12000
Blade Speed	r.p.m. 1500
Crushed Ice Max. Thickness	10 mm
Bowl Capacity	2 Lt
Net Weight	8,5 Kg
Dimensions	A B C D E 365 mm 210 mm 465 mm 295 mm 480 mm

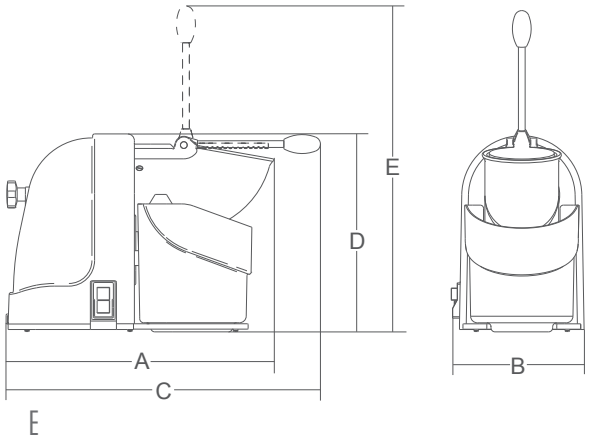

Carrying

Carrying Containers

» w/o Sandwich Bottom

Code	Øxh (cm)	Lt
35512428	24x28	12,5
35513028	30x28	20
35513032	30x32	21
35513636	36x36	36,6
35514040	40x40	50
35514545	45x45	70
35515050	50x50	100

» w/o Sandwich Bottom-Lid w/Silicone Seal

Code	Øxh (cm)	Lt
35532428	24x28	12,5
35533028	30x28	20
35533032	30x32	21
35533636	36x36	36,6
35534040	40x40	50
35534545	45x45	70

» w/Sandwich Bottom

Code	Øxh (cm)	Lt
35502428	24x28	12,5
35503028	30x28	20
35503032	30x32	21
35503636	36x36	36,6
35504040	40x40	50
35504545	45x45	70
35505050	50x50	100

» w/Sandwich Bottom-Lid w/Silicone Seal

Code	Øxh (cm)	Lt
35542428	24x28	12,5
35543028	30x28	20
35543032	30x32	21
35543636	36x36	36,6
35544040	40x40	50
35544545	45x45	70

» Double Wall Container

Code	Øxh (cm)	Lt
35503217	32x17	10
35503222	32x22	14
35503230	32x30	20
35503236	32x36	24
35503248	32x48	32
35505030	50x30	43

» Container w/Faucet

Code	Øxh (cm)	Lt
35412428	24x28	12,5
35413028	30x28	20
35413032	30x32	21
35413636	36x36	36,6
35414040	40x40	50
35414545	45x45	70
35415050	50x50	100

» Silicone Seals

Code	Ø (cm)
35510024	24
35510030	30
35510036	36
35510040	40
35510045	45

* Food safe compliances.

Standard

Code	Øxh (cm)	PcsxLt
30631808	18x8x3	3x2
30641808	18x8x4	4x2
30632010	20x9x3	3x3
30642010	20x9x4	4x3
30632414	24x14x3	3x6
30642414	24x14x4	4x6
30633014	30x14x3	3x10
30643014	30x14x4	4x10

Double Wall

Code	Ø x h (cm)	PcsxLt
35502092	20x11x2	2x3
35502093	20x11x3	3x3
35502094	20x11x4	3x4

Carrying Tray-on Cover

Code	Dim. (cm)
30714565	40x60x5
30714568	40x60x8
30714561	40x60x10
30715355	50x35x5
30715358	50x35x8
30715310	50x35x10
30715705	50x70x5
30715708	50x70x8
30715710	50x70x10

Carrying Tray

Code	Dim. (cm)
30704565	40x60x5
30704568	40x60x8
30704561	40x60x10
30705355	50x35x5
30705358	50x35x8
30705310	50x35x10
30705705	50x70x5
30705708	50x70x8
30705710	50x70x10

plast port®

- Dishwasher safe
- Can withstand temperatures from -40°C to + 100°C
- Smooth inside surface that is hygenic and easy to clean
- Features tough reinforced corners
- Can carry from 53 to 63 lt
- Light case that is easy to lift
- Stackable
- Double walls filled with polyurethane foam
- Does not contain any substances harmful to human health
- Other colours available upon reqyest

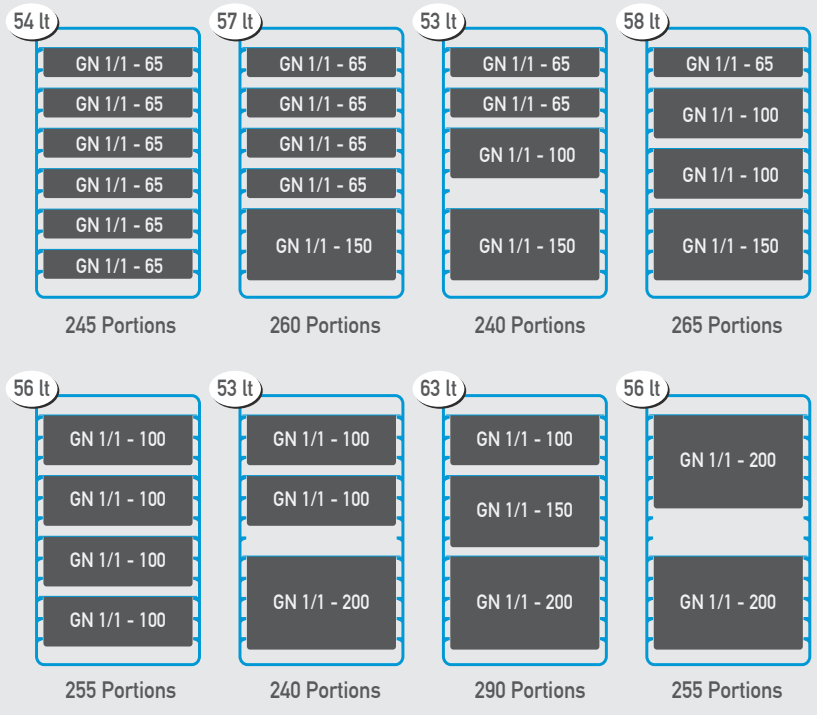

TESTS Tested with four 10 cm deep trays filled with hot water at 88°C'lik sıcak su ve 0,5°C'lik soğuk su ile test edilmiştir.

	Start	1 Hour	2 Hour	3 Hour	4 Hour	5 Hour
HOT	88°C	83°C	81,9°C	80,2°C	79°C	77,6°C
COLD	0,5°C	1°C	1,5°C	2°C	2,4°C	2,8°C

EASY CLEAN 5 PP CFC FREE

*Colour options

Inner Dimensions	: 33x52x50 cm
Outer Dimensions	: 44x66x63 cm
Weight	: 14 Kg

» Termobox 600 (Side-Hinged)

Code

46011600

Inner Dimensions	: 33x52x50 cm
Outer Dimensions	: 44x66x63 cm
Weight	: 13,5 Kg

» Thermobox 600

Code

46010600

* Front loading model. Designed for GN Food Pan Standards.

EASY CLEAN 5 PP CFC FREE

*Colour options

KAPP

» Beverage Thermobox

Code	Lt
43020300	23

» Food &Beverage Thermobox

Code	Lt
43020250	33

* Overhead loading model. Designed for GN Food Pan Standards

*w/o Accessories

» Thermobox

Code	Dim. (mm)	Model
43020100	635x435x200	Max. GN 1/1-100
43120100	635x435x200	Max. GN 1/1-100
43220100	635x435x200	Max. GN 1/1-100
43320100	635x435x200	Max. GN 1/1-100
43020150	635x435x250	Max. GN 1/1-150
43120150	635x435x250	Max. GN 1/1-150
43220150	635x435x250	Max. GN 1/1-150
43320150	635x435x250	Max. GN 1/1-150
43020200	635x435x310	Max. GN 1/1-200
43120200	635x435x310	Max. GN 1/1-200
43220200	635x435x310	Max. GN 1/1-200
43320200	635x435x310	Max. GN 1/1-200

430 431 432 433

» Isothermic Tray

Code	Dim. (mm)	Model
43020105	530x370x120	5 Partition
43020106	530x370x120	6 Partition

» Serving Trolley

Code	Dim. (cm)
46010028	107x52x96

*w/o Waste bins.

» Serving Trolley (Closed)

Code	Dim. (cm)
46010027	98x53x93

*w/o Waste bins.

» Serving Trolley 5 Shelved

Code	Dim. (cm)
46011029	160x80x50

» Serving Trolley 5 Shelved (Closed)

Code	Dim. (cm)
46011030	160x80x50

» Waste Bin

Code	Dim. (cm)
43010011	33,5x23x44,5

» Wheel

Code	Dim. (mm)
46011031	40x40x30

» Demontable Service Trolley

Code	Dim. (cm)
34266018	90x60x18

» Demontable Service Trolley

Code	Dim. (cm)
34266022	90x60x22

» Monoblock Service Trolley

Code	Dim. (cm)
43010002	98x58,5x88

*w/o Waste bin.

430 **431** **432**

» Cutlery Bin

Code	Dim. (cm)
43010012	33,5x23x18

» Bus Box

Code	Dim. (cm)
60020010	54x39x20

» 4 Compartment Cutlery Holder

Code	Dim. (cm)
60020011	52x29x9,5

*** All products are suitable for serving trolleys.**

» Serving Trolley 2 Shelved

Code	Dim. (mm)
47111004	540x780x900

» Serving Trolley 3 Shelved

Code	Dim. (mm)
47111003	540x880x900

» Beverage Cart 3 Shelved

Code	Dim. (mm)
47111005	500x500x940

Carrying Trolleys

» Table Top Plate Rack

Code	Capacity
43010015	20 Plate

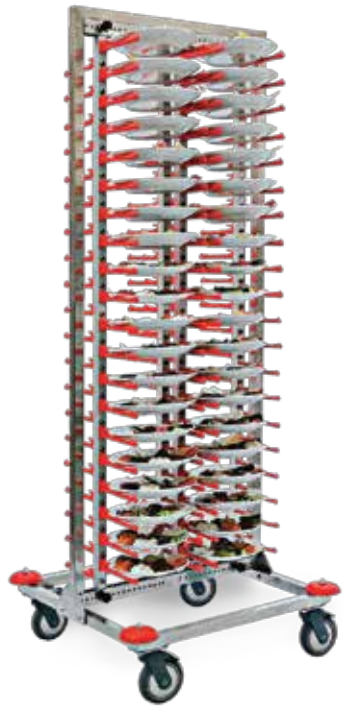

» Mobile Plate Rack

Code	Capacity
43010014	80 Plate

» Rack Trolley

Code	Capacity	Dim. (cm)
48010005	5 Rails	37x53
48010010	10 Rails	37x53

» Adjustable Dish Dolly

Code
43010013

» Ingredient Bin w/Sliding Lid

Code	Dim. (cm)	Lt
46010010	42x75x71	102

» Meat Carrying Dolly

Code	Dim. (cm)	Capacity
48060001	56x55x50	200 Kg

» Utility Rack

Code	Model	Dim. (cm)	Capacity
48013753	Single	43x56x171	13 Pcs. 37x53 Tray
48023753	Double	83x56x171	26 Pcs. 37x53 Tray
48033753	Triple	123x56x171	39 Pcs. 37x53 Tray
48043753	Quadriple	175x77x171	52 Pcs. 37x53 Tray

Tray Cart

Code	Model	Dim. (cm)	Capacity
48014060	Single	40x63x165	15 Pcs. 40x60 Tray
48024060	Double	90x63x165	30 Pcs. 40x60 Tray
48015070	Single	56x73x170	15 Pcs. 50x70 Tray

» Tray Cart GN 1/1

Code	Model	Dim. (cm)	Capacity
48011009	Single	38x56x105	9 Pcs. GN 1/1 Tray
48011017	Single	38x56x172	17 Pcs. GN 1/1 Tray
48011034	Double	74x56x172	34 Pcs. GN 1/1 Tray

» Tray Cart GN 2/1

Code	Model	Dim. (cm)	Capacity
48012109	Single	59x68x105	9 Pcs. GN 2/1 Tray
48012117	Single	59x68x172	17 Pcs. GN 2/1 Tray
48012134	Double	115x68x172	34 Pcs. GN 2/1 Tray

SDX Thermobox

- Convection heating, 230V/1350 W
- Adjustable thermostat from 55°C to 80°C
- 15 mins. heating time

» Heating SDX Thermobox

Code	Model	Dim.(cm)
41030015	8 Shelves	53x76,5x118,5
41030018	12 Shelves	53x76,5x132,5
41030014	14 Shelves	53x76,5x148,5

- Active refrigeration, 230V/245 W
- Patented Peltier Technology
- Cooling to 2-3 °C in 60 mins.

» Chill SDX Thermobox

Code	Model	Dim.(cm)
41031008	8 Shelves	53x80,5x118,7
41031012	12 Shelves	53x80,5x129
41031014	14 Shelves	53x82,5x136

» Combination SDX Thermobox

Code	Model	Dim.(cm)
41032010	4+6 Shelves	53x80,5x126
41032012	4+8 Shelves	53x82,5x141,5
41032024	12+12 Shelves	103x82,5x136

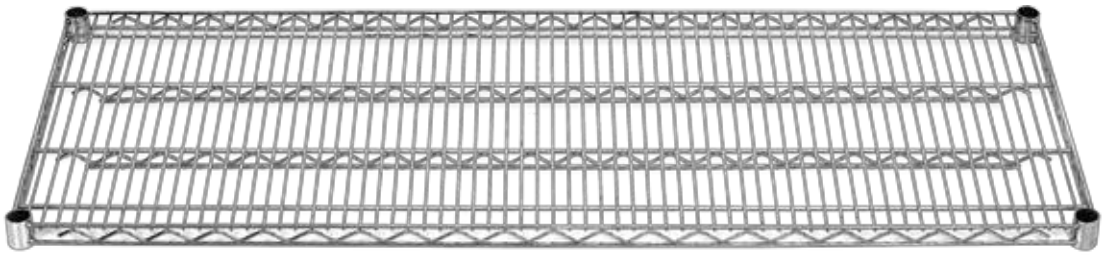

» Perforated Shelves

Code	Dim. (mm)
50203661	360x610
50203676	360x760
50203691	360x910
50236107	360x1070
50236122	360x1220
50236137	360x1370
50236152	360x1520
50236183	360x1830

» Perforated Shelves

Code	Dim. (mm)
50204661	460x610
50204676	460x760
50204691	460x910
50246107	460x1070
50246122	460x1220
50246137	460x1370
50246152	460x1520
50246183	460x1830

Perforated Shelves

Code	Dim. (mm)
50205361	530x610
50205376	530x760
50205391	530x910
50253107	530x1070
50253122	530x1220
50253137	530x1370
50253152	530x1520
50253183	530x1830

» Perforated Shelves

Code	Dim. (mm)
50206161	610x610
50206176	610x760
50206191	610x910
50261107	610x1070
50261122	610x1220
50261137	610x1370
50261152	610x1520
50261183	610x1830

» Elevator

Code	Dim. (mm)
50201600	1600
50201800	1800

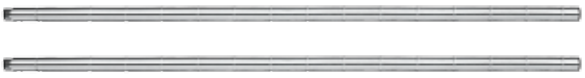

Perforated Shelveslar w/4 Floor

» Perforated Shelves w/4 Floor

Code	Dim. (mm)
50503661	360x610x1600
50503676	360x760x1600
50503691	360x910x1600
50536107	360x1070x1600
50536122	360x1220x1600
50536137	360x1370x1600
50536152	360x1520x1600
50536183	360x1830x1600

» Perforated Shelves w/4 Floor

Code	Dim. (mm)
50504661	460x610x1600
50504676	460x760x1600
50504691	460x910x1600
50546107	460x1070x1600
50546122	460x1220x1600
50546137	460x1370x1600
50546152	460x1520x1600
50546183	460x1830x1600

» Perforated Shelves w/4 Floor

Code	Dim. (mm)
50505361	530x610x1600
50505376	530x760x1600
50505391	530x910x1600
50553107	530x1070x1600
50553122	530x1220x1600
50553137	530x1370x1600
50553152	530x1520x1600
50553183	530x1830x1600

» Perforated Shelves w/4 Floor

Code	Dim. (mm)
50506161	610x610x1600
50506176	610x760x1600
50506191	610x910x1600
50561107	610x1070x1600
50561122	610x1220x1600
50561137	610x1370x1600
50561152	610x1520x1600
50561183	610x1830x1600

» Perforated Shelves w/4 Floor

Code	Dim. (mm)
50703661	360x610x1800
50703676	360x760x1800
50703691	360x910x1800
50736107	360x1070x1800
50736122	360x1220x1800
50736137	360x1370x1800
50736152	360x1520x1800
50736183	360x1830x1800

» Perforated Shelves w/4 Floor

Code	Dim. (mm)
50704661	460x610x1800
50704676	460x760x1800
50704691	460x910x1800
50746107	460x1070x1800
50746122	460x1220x1800
50746137	460x1370x1800
50746152	460x1520x1800
50746183	460x1830x1800

» Perforated Shelves w/4 Floor

Code	Dim. (mm)
50705361	530x610x1800
50705376	530x760x1800
50705391	530x910x1800
50753107	530x1070x1800
50753122	530x1220x1800
50753137	530x1370x1800
50753152	530x1520x1800
50753183	530x1830x1800

» Perforated Shelves w/4 Floor

Code	Dim. (mm)
50706161	610x610x1800
50706176	610x760x1800
50706191	610x910x1800
50761107	610x1070x1800
50761122	610x1220x1800
50761137	610x1370x1800
50761152	610x1520x1800
50761183	610x1830x1800

Dish Washing

plast port®

» Plate/Trays Rack

Code	Dim. (mm)
43030001	500x500x100

» Cutlery Rack

Code	Dim. (mm)
43030002	500x500x100

» Glass Rack

Code	Dim. (mm)
43030003	500x500x100

» 9 Compartment Base

Code	Dim. (mm)
43003009	500x500x100

» 16 Compartment Base

Code	Dim. (mm)
43003016	500x500x100

» 25 Compartment Base

Code	Dim. (mm)
43003025	500x500x100

» 36 Compartment Base

Code	Dim. (mm)
43003036	500x500x100

» 49 Compartment Base

Code	Dim. (mm)
43003049	500x500x100

» 9 Compartment Extender

Code	Dim. (mm)
43004001	500x500x40

» 16 Compartment Extender

Code	Dim. (mm)
43004002	500x500x40

» 25 Compartment Extender

Code	Dim. (mm)
43004003	500x500x40

» 36 Compartment Extender

Code	Dim. (mm)
43004004	500x500x40

» 49 Compartment Extender

Code	Dim. (mm)
43004005	500x500x40

» Open Extender

Code	Dim. (mm)
43004006	500x500x40

» Cutlery Holder 8 Compartments

Code	Dim. (mm)	Colour
43003004	450x250x200	Beige
43103004	450x250x200	Grey

430 **431**

» Dolly

Code	Dim. (mm)	Colour
43003005	580x580x220	Black
43103005	580x580x220	Blue
43203005	580x580x220	Brown
43303005	580x580x220	Red

430 **431** **432** **433**

Electrical Insect Killers

- Voltage : 220 - 230 V / 50 Hz
- UV Tube : 2x20 W
- Effective Range : 35-40 m²
- Discharge Voltage : 5000 V
- Weight : 9,5 Kg
- Dimensions : 70x21,5x39 cm

» Electrical Insect Killer

Code	Power
67010001	2x20 W

- Voltage : 220 - 230 V / 50 Hz
- UV Tube : 2x40 W
- Effective Range : 55-60 m²
- Discharge Voltage : 5000 V
- Weight : 9,5 Kg
- Dimensions : 70x21,5x39 cm

» Electrical Insect Killer

Code	Power
67010002	2x40 W

- Voltage : 220 - 230 V / 50 Hz
- UV Tube : 2x40 W
- Effective Range : 100-110 m²
- Discharge Voltage : 5000 V
- Weight : 13 Kg
- Dimensions : 127x21,5x39 cm

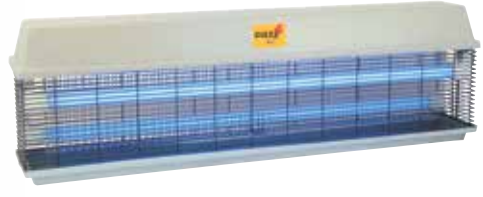

» Electrical Insect Killer

Code	Power
67010003	2x40 W

- Voltage : 220 - 230 V / 50 Hz
- Power : 2x40 W (Short Bulb)
- Effective Range: 50 m²
- Dimensions : 70x50x25 cm

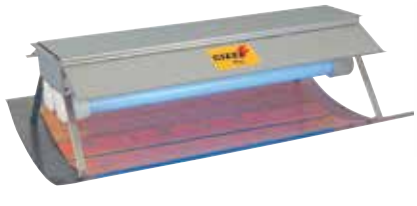

» Electronic Insect Trap

Code	Power
67010004	2x40 W

- Voltage : 220 - 230 V / 50 Hz
- Power : 2x40 W (Long Bulb)
- Effective Range: 100 m²
- Dimensions : 125x50x25 cm

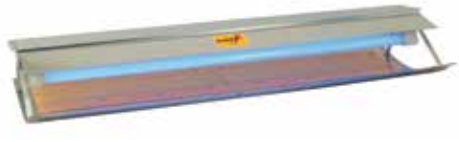

» Electronic Insect Trap

Code	Power
67010006	2x40 W

- Voltage : 220 - 230 V / 50 Hz
- Power : 2x40 W (Long Bulb)
- Effective Range: 50 m²
- Dimensions : 62,5x31x21 cm

» Electronic Insect Trap

Code	Power
67010005	2x40 W

» Dish Washing Counter-Mounted

Code	Model
41030008	Classic
41130008	Mid-tap

» Dish Washing Wall-Mounted

Code	Model
41030011	Classic
41130011	Mid-tap

» Dish Washing

Code	Dim.
41030007	w/Roller (6 mt.)
41030010	w/Roller (15 mt.)

» Sink

Code	Dim. (cm)
30804425	40x40x25
30804525	40x50x25
30804530	40x50x30
30805525	50x50x25
30805530	50x50x30

» Rubbish Bin

Code	Model	Øxh(cm)
35524040	w/Wheel-w/o Lid	40x40
35524041	w/Wheel-w/Lid	40x40

» Rotil Feet

Code	Dim. (mm)
46014055	40x55x115/181
46014040	40x40x93/151
46016060	Ø 60

ALPHABETICAL INDEX

A Abc Containers 61
Acrylic Sugar Caddy 226
Adjustable Dish Dolly 288
Adjustable Mould 107
Aliminum Non-stick Creppe Pan 34
Aliminum Non-stick Frypan 34
Aliminum Non-stick Wok Pan 34
Aluminium Pizza Tray 28
Amuse Bouche Spoon 182
Amuse Bouche Spoon Stand 182
Appetizer Display 235
Apple Corer 68
Apple Wedger 67
Ashtray 215
Ashtray Stand 215
B Baguette Basket 201
Bain-marie Pot Calibrated 73
Baking Sheet Non-stick 97
Baking Sheet Silicone 104
Bamboo Base W/high Heat Magnet 35
Bar Spoon 234
Bar Strainer 234
Beverage Blender 272/274
Beverage Mixer 274
Beverage Thermobox 284
Blender 222
Blender 240/243
Bo 115
Bone Saw 258/259
Boston Shaker 233
Bottle Cooler 230
Bottle Stand 232
Bouillon Strainer 77
Bowl 197/198
Bowl Hammered 213
Bread Basket 201
Bread Basket 214
Bread Basket Rattan 174
Bucket Calibrated 73
Burner Holder 164
Butcher Gloves Chainmail 93
Butter Curler 68
C Cake Ring 107
Cake Stand 116
Can Opener 68
Candle Holder 212
Carbon Steel Blinis Pan 35
Carbon Steel Frypan 35
Carbon Steel Non-stick Creppe Pan 36
Carbon Steel Non-stick Frypan 36
Carbon Steel Non-stick Paella Pan 36
Carbon Steel Non-stick Square Grill 36
Carbon Steel Non-stick Wok Pan 36
Carbon Steel Wok Pan 35
Carrying Container 280
Carrying Tray 281
Cast Iron Pots 25
Ceramic Coated Pan 29
Chafing Dish Bulit-in 159
Chafing Dish Classic 160/161
Chafing Dish Copper 137
Chafing Dish Delux 156/159
Chafing Dish Food Pan 162
Chafing Dish Food Pan Porcelain 162
Chafing Dish Lux 139/144
Chafing Dish Modern 146/147
Chafing Dish Premium 149/154
Chalice Sweetener 234
Champagne Bucket 232
Champagne/ice Bucket Stand 232
Charcoal Tong 131
Cheese Grater 249
Cheese Knife 68
Cheese Slicer 68
Chef Tong 131
Chef's Tong 75
Chinese Colander 77
Chocolate Moulds 105/106
Citrus Juicer 223
Citrus Juicer 275
Cleaver 92
Cocktail Shaker 233
Colander 76
Colander (Exclusive) 21
Colander For Gn Pan 51
Colander For Saucepan (Exclusive) 21
Cold Plate Unit 174
Compartment Base 296
Compartment Extender 297
Condiment Set 210
Conical Bowl Calibrated 73
Conical Saute Pan 33
Conical Snack Holder 211
Conical Strainer 77
Convection Oven 265
Conveyor Toaster 266
Cooler&dispenser 219
Couscous Colander 22
Couscous Set W Lid 22
Cream Whipper 113
Cutlery Bin 286
Cutlery Bin 4 Compartment 286
Cutlery Rack 296
Cutlery Stand 182
Cutting Board For Gn Pan 82
Cutting Board Pe 82
Cutting Board Rack 82
D Deco Spoon Set 132
Decorator 67
Decorator 68
Deep Casserole (Bistro) 14/17
Deep Casserole (Exclusive) 20
Deep Saucepan (Exclusive) 21
Demontable Service Trolley 286
Dish Washing 299
Dispenser 224/225
Dispenser Cereal 166
Dispenser Coffee 165
Dispenser Ice Tea 165
Dispenser Juice 165
Display Basket 211
Display Cover 212
Display Plate 162
Display Stand 172/173
Dolly 297
Dough Scrapper 81
Dough Wheel 109
Drainer Plate 51
E Egg Ring 74
Egg Slicer 67
Egg Stand W/heater 182
Electrical Heating Unit 164
Elevator 188/189
Elevator Stand 152
Enamel Coated Pan 29
F Fish Bone Pincer 131
Fish Scale Cleaner PE 76
Flacone 115
Food Mill 66
Food Pan Porcelain Round 50
French Fries Shovel 132
French Fry Cutter 63
French Press 226
Fruit Stand 182
Fruit Striper 68
Frypan (Bistro) 14/17
Funnel W/strainer 77
G Garlic Press 67
Glass Mug 226
Glass Pc 227
Glass Rack 296
Glove 109

Gn 1/1 Angled Adaptor Plate 51
Gn Appetizer Pan 49
Gn Food Pan Lid 48
GN Food Pans 42
GN Food Pans Perforated 44
GN Food Pans w/handle 46
Gn Ice Cream Container 49
Gn Melamine Pans 57
Gn Pan Adjustment Bar 51
Gn Pc Pans 56
Gn Porcelain Food Pan 50
Granita&ice Slush Dispenser 220
Grater 71
Grater 74
Gravy Boat 212
Grid For Hot Dishes 51
Grill Tong 131
H Hamburger Press 66
Honey Comb Stand 182
Honey Spoon PE 75
Hot Chocolate Dispenser 219
Hot Plate Unit 174
I Ice Bucket 230
Ice Cream Cup 213
Ice Cream Spoon 132
Ice Crusher 234
Ice Crushing Machine 276/277
Ice Slush Dispenser 220
Icing Tip Set 113
Induction Cooker 176/179
Induction Cooker 268/269
Induction Heating 164
Infrared Lamp 168/169
Ingredient Bin 288
Insect Killers Electrical 298
Isothermic Tray 284
J Japanese Mandoline 62
Jar Set 210
Jigger 234
Jug PC 226
Juice Cooler 218
Jumbo Stockpot (Bistro) 14/17
Jumbo Stockpot (Exclusive) 20
K Ketchup Bottle 133
Ketchup Dispencer 133
Knife Streilizer 93
Knives 84/90
L Ladle 125
Lid (Bistro) 14/17
Lid Satin (Exclusive) 21
M Magnetic Board 93
Mandoline 62
Manuel Can Opener 66
Mayonnaise Bottle 133
Mayonnaise Dispenser 133
Measuring Cup 73
Measuring Cup Pc 73
Measuring Cup Set 73
Measuring Spoon Set 73
Meat Carrying Dolly 288
Meat Fork 126
Meat Hook 92
Meat Tenderiser 92
Melamine Bowl 192/193
Melamine Display Plates 194/196
Microwave Oven 264
Milk Can 165
Mini Display Pan 211
Mini Melamine Displays 183
Mini Punch Bowl 230
Mini Tea Bag Holder 226
Miniature French Fries Basket 211
Mixing Bowl Calibrated 73
Mixing Glass 233
Mixing Spatula 75
Monoblock Service Trolley 286
Mortar PE 76
Mould Non-stick 96/98
Moulds Silicone 99/104
Mug 226
Mustard Bottle 133
Mustard Dispenser 133
N Name Tag 164
Napkin Holder 212
Napkin/pipette Holder 234
Non-stick Gn (Aliminum) 29
Non-stick Gn (Stainless) 29
Nut Cracker 67
O Oil&vinegar Stand 210
Orange Juicer 221
P Pans Cast Iron 37
Pans Ceramic Coated 34
Pasta Colander 1/4 - Segment 22
Pasta Colander Set 22
Pastry Bag 112
Pc Bar Container 234
Pc Square Food Storage Container 59
Peeler 68
Perforated Shelf 291
Perforated Shelf W/4 Floor 292/293
Pineapple Peeler 63
Pizza Roulette 81
Pizza Warmer 270
Planet Mixer 256/257
Plate Cover 212
Plate Rack Mobile 288
Plate Rack Table Top 242
Plate/trays Rack 296
Plates PC 208
Pomegranate Dispenser 221
Portable Food Container 281
Potato Masher 75
Poultry Shears 67
Pourer 234
Pouring Container 115
Pouring Container 133
Pp Storage Containers 60
Pressure Cooker 9/10
Pressure cooker lid 9/10
Punch Bowl 233
R Revolving Cake Stand 116
Rice Scoop 132
Roast Easy 27
Roasting Pan 28
Roasting Pan Round 28
Roller 114
Rolling Pin 114
Rubbish Bin 299
S S/S Pans 32
Salad Spinner 62
Salt & Pepper Set 209
Sauce Bottle 133
Sauce Gun 74
Sauce Ladle 125
Sauce Tureen 161
Saucepan 33
Saucepan (Bistro) 14/17
Sautepan 32
Scale 72
Scissor 67
Scoop 75
Sdx Thermobox 290
Seed Remover Olive/cherry 67
Self Service 124
Self Service Pc 124
Serving Set 128/132
Serving Spatula 127
Serving Spoon 126
Serving Trolley 285
Shaker 76
Shallow Casserole (Bistro) 14/17
Shallow Casserole (Exclusive) 20
Shallow Saucepan (Exclusive) 21

Shallow Stewpan (Bistro) 14/17
Shallow Stewpan (Exclusive) 21
Sieve 76
Silicone Cover For Handle 36
Silicone seal 9/10
Silicone Utensils 129
Sink 299
Skimmer 125
Skimmer 78
Slate Display 190/191
Slicer 250/255
Soft Cooker 262/263
Soup Tureen 161
Spatula 80
Spatula Angular 80
Spatula Monoblock 127
Spatula Pastry 80
Spatula PE 75
Spatula Pizza 80
Spatula Wide 78
Speed Rail 74
Spoon 126
Spoon Rest 132
Square Ring 107
Stand 180/182
Stockpot (Exclusive) 20
Storing Shelf For Cutting Board 82
Sugar Bowl Pc 210
Swivel Peeler 68
T Tea Maker 221
Tea/milk Pot 226
Thermobox 284
Thermobox 600 283
Thermometer 70
Tickets Holder 75
Timer Digital 70
Toastbrot Non-stick 97
Tomato Slicer 63
Tongs 130
Torch 113
Tray Aluminium 116
Tray Cart 240/241
Tray Crystal Display 185
Tray Display 124
Tray PC Unbreakable 122
Tray Serving 123
Turning Slicer 62
U Utensils 68
Utility Rack 289
V Vacuum Packaging Machines 260
Vegetable Cutter 64
Vegetable Cutter 244/248
Vegetable Wedger 63
W Warmer Stand 155
Waste Bin 285
Water Jug 226
Whisk 79
Wide Shallow Pans 23
Wide Shallow Pot's Lid 23
Wide Shallow Pots 23
Wine Bucket 232
Wine Bucket Table Stand 232
Wire Grid 51
Wooden Base 25
Wooden Display Plates 206/207
Y Y-shaped Swivel Peeler 68

Cooking
Preparing
Pastry
Serving
Open Buffet
Table-Top
Beverage
Bar
Kitchen Appliences
Carrying
Dish Washing

Izmir Factory: 29 Ekim Mah. Kuscu Cad. No: 11
Yazibasi, Torbali / Izmir - TURKEY

EXPORT OFFICE : Albay Faik Sozdener Cad. Canatan Apt.
No:27 D:3 34710 Kadikoy / ISTANBUL / TURKIYE
Tel : +90 (216) 345 50 96 - 345 95 47 - 347 39 43
Fax : +90 (216) 337 17 46
seyeks@seyeks.com
zeynepeda@seyeks.com ozgur@seyeks.com
POLAND OFFICE / WAREHAUSE : Amber Business Park
Ul. Uczniowska 33, 80-530 GDANSK / POLAND
Tel: + 48 58 341 7000
Fax: + 48 58 344 1593
hakanhaner@kapp.pl
www.kapp.pl - www.kappshop.com